SLIDE UNITS
for Cylinders

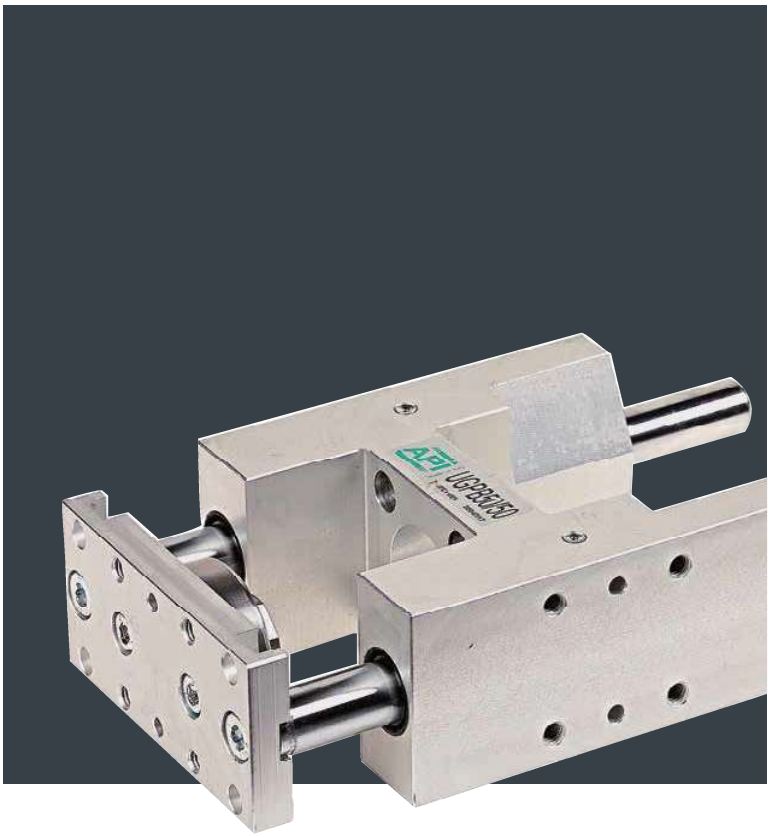

Find out our
key products

- **Solution for most applications**
- **Easy and intuitive choice**
- **Excellent value for money**
- **Wide availability**
- **Fast delivery**

ALMOTION B.V. Nijverheidsweg 14 | 6662 NG Elst (Gld) | The Netherlands t +31(0)85 0491 777 e info@almotion.nl
www.almotion.nl | www.lineairegeleiding.nl | www.lineairegeleidingshop.nl | www.linearmotion.nl

Slide Units for Cylinders

Features and certifications

Series of linear slide units for cylinders conformig to standard ISO 6432 and ISO 15552 possible to be fixed on four sides. These component are used with heavy loads to guarantee a better linearity of movement and an higher precision. Sometimes can be used as anti-rotating devices too. Available in three types with different features. The versions with spherical bearing slides better, but they can support lower loads than the versions with sintered bronze bushings. U-shaped versions, on the other hand, can support lower loads than the H-shaped.
Supplied as standard in compliance with Reach and RoHS directives. On request they also can be supplied according to 2014/34/EU ATEX Directive.

Slide Units for Cylinders ISO 6432 type UGLB

from page 1.70.10

U-shaped linear slide units with sintered bronze bushings, for cylinders ISO 6432, possible to be fixed on four sides. These component are used with heavy loads to guarantee a better linearity of movement and an higher precision. Sometimes can be used as anti-rotating devices too.
On request they also can be supplied according to ATEX Directive.

Slide Units for Cylinders ISO 6432 type UGPB

from page 1.70.10

H-shaped linear slide units with sintered bronze bushings, for cylinders ISO 6432, possible to be fixed on four sides. These component are used with heavy loads to guarantee a better linearity of movement and an higher precision. Sometimes can be used as anti-rotating devices too.
On request they also can be supplied according to ATEX Directive.

Slide Units for Cylinders ISO 6432 type UGPS

from page 1.70.10

H-shaped linear slide units with spherical bearings, for cylinders ISO 6432, possible to be fixed on four sides. These component are used with heavy loads to guarantee a better linearity of movement and an higher precision. Sometimes can be used as anti-rotating devices too.

Slide Units for Cylinders ISO 15552 type UGLB

from page 1.70.20

U-shaped linear slide units with sintered bronze bushings, for cylinders ISO 15552, possible to be fixed on four sides. These component are used with heavy loads to guarantee a better linearity of movement and an higher precision. Sometimes can be used as anti-rotating devices too.
On request they also can be supplied according to ATEX Directive.

Slide Units for Cylinders ISO 15552 type UGPB

from page 1.70.20

H-shaped linear slide units with sintered bronze bushings, for cylinders ISO 15552, possible to be fixed on four sides. These component are used with heavy loads to guarantee a better linearity of movement and an higher precision. Sometimes can be used as anti-rotating devices too.
On request they also can be supplied according to ATEX Directive.

Slide Units for Cylinders ISO 15552 type UGPS

from page 1.70.20

H-shaped linear slide units with spherical bearings, for cylinders ISO 15552, possible to be fixed on four sides. These component are used with heavy loads to guarantee a better linearity of movement and an higher precision. Sometimes can be used as anti-rotating devices too.

ALMOTION B.V. Nijverheidsweg 14 | 6662 NG Elst (Gld) | The Netherlands t +31(0)85 0491 777 e info@almotion.nl
www.almotion.nl | www.lineairegeleiding.nl | www.lineairegeleidingshop.nl | www.linearmotion.nl

Options

Description	Suffix
AISI 304 Stainless Steel rods (only for type UGLB and UGPB)	**K**
ATEX version on request (only for type UGLB and UGPB, option K required)	**/ATEX**
Special versions on request	**/S**

The options, when this is possible, can be combined with each other. For options matching and code key, see the tables below.

Options matching

Series	Bore	Model	Standard options matching	
			K	**/ATEX** (1)
UGLB - UGPB	Ø 12 ÷ 100	Standard	●	●
		Stainless Steel Rods (K)		●
UGPS	Ø 12 ÷ 100	Standard	-	-

Key

● allowed matching; - not allowed matching

(1) For **/ATEX** versions, Stainless Steel Rod (option **K**) is required

Code key

Type	Cylinder bore	/	Cylinder stroke	Options	/	ATEX versions	Special versions
UGPB	**20**	**/**	**200**	**K**	**/**		

Type	Cylinder bore	Cylinder stroke	Options	ATEX versions	Special versions
UGLB	Ø 12, 16, 20, 25 Slide Units for Cylinders ISO 6432	10 mm ÷ 2500 mm Stroke max. 1000 mm (Slide Unit for cylinders ISO 6432) Stroke max. 2500 mm (Slide Unit for cylinders ISO 15552)	K*	ATEX* CE Ex II 2G Ex h IIC T5 Gb II 2D Ex h IIIC T100°C Db	S
UGPB	Ø 32, 40, 50, 63, 80, 100 Slide Units for Cylinders ISO 15552				
UGPS					

* Only for type UGLB - UGPB

How to order

Type	Cylinder bore		Cylinder stroke	Options
UGPB	**20**	**/**	**200**	**K**

Notes

For further information on options and their matching, see tables above.

For further information on the ATEX 2014/34/EU Directive, on classifications and protections, see from page III.1

ALMOTION B.V. Nijverheidsweg 14 | 6662 NG Elst (Gld) | The Netherlands t +31(0)85 0491 777 e info@almotion.nl

www.almotion.nl | www.lineairegeleiding.nl | www.lineairegeleidingshop.nl | www.linearmotion.nl

Standard materials

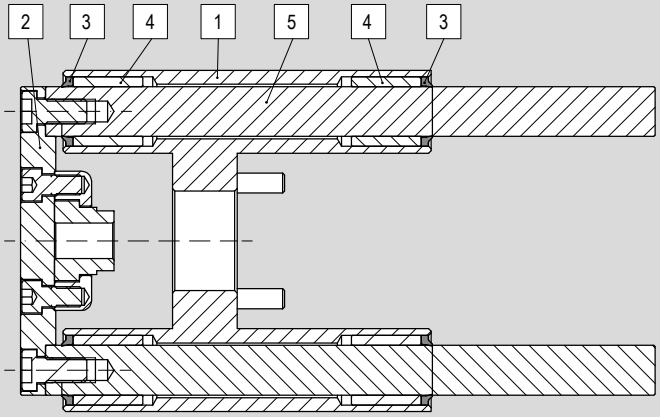

Position	Description	Materials		
		UGLB	UGPB	UGPS
1	Body	Anodised aluminium		
2	Plate	Anodised aluminium		
3	Seals	Polyurethane (PU)		
4	Bushings	Sintered bronze		Spherical bearings
5	Rods	Chrome-plated C45 steel		Hardened and chrome-plated CF51 Steel

Accessories

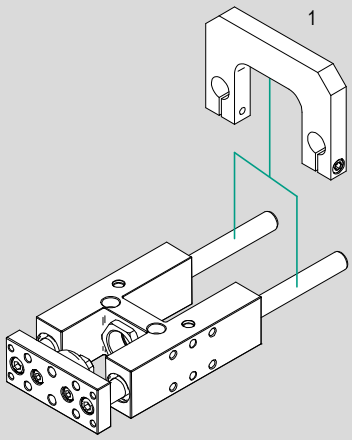

N.	Slide Unit bore	Item	Description	Matching			Code page	Data sheet page
				UGLB	UGPB	UGPS		
1	Ø 32 ÷ 100	SCSG	Connecting bracket for rods	●	●	●	1.70.50	1.100.400

Key
● allowed matching; – not allowed matching

ALMOTION B.V. Nijverheidsweg 14 | 6662 NG Elst (Gld) | The Netherlands t +31(0)85 0491 777 e info@almotion.nl

www.almotion.nl | www.lineairegeleiding.nl | www.lineairegeleidingshop.nl | www.linearmotion.nl

Slide Units for Cylinders

Slide Units for Cylinders ISO 6432

Main features

12 ÷ 25
Bores Ø

UGLB
Type

12 ÷ 25
Bores Ø

UGPB
Type

12 ÷ 25
Bores Ø

UGPS
Type

Technical data

Type	UGLB	UGPB	UGPS
Description	U-shaped (for light loads) with sintered bronze bushings	H-shaped (for heavy loads) with sintered bronze bushings	H-shaped (for heavy loads) with spherical bearings
Bores	Ø 12 ÷ Ø 25		
Strokes	10 ÷ 1000 mm		
Temperature	-20°C ÷ +70°C		

Standard strokes

	UGLB Bore Ø mm			
Stroke mm	12	16	20	25
10				
25				
50				
80				
100				
125				
160				
200				
250				
320				
400				
500				

	UGPB - UGPS Bore Ø mm			
Stroke mm	12	16	20	25
10				
25				
50				
80				
100				
125				
160				
200				
250				
320				
400				
500				

Key
Standard stroke

ALMOTION B.V. Nijverheidsweg 14 | 6662 NG Elst (Gld) | The Netherlands t +31(0)85 0491 777 e info@almotion.nl
www.almotion.nl | www.lineairegeleiding.nl | www.lineairegeleidingshop.nl | www.linearmotion.nl

Slide Units for Cylinders

Slide Units for Cylinders ISO 6432 series UGLB

Standard dimensions

Type: **UGLB**
Ø 12 ÷ 16

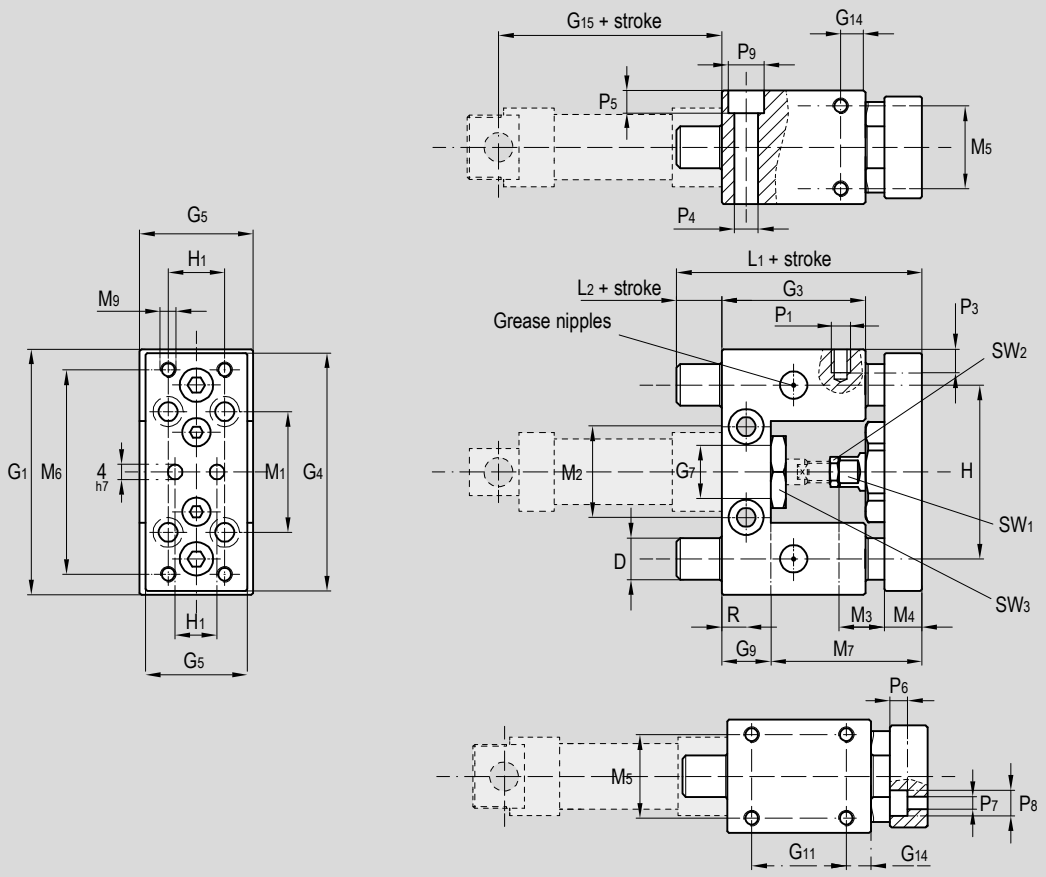

Ø (mm)	D	G_1	G_2	G_3	G_4	G_5	G_7	G_9	G_{11}	G_{14}	G_{15}	H	H_1	L_1	L_2	M_1	M_2	M_3
12	10	65	30	38	63	27	16	13	25	6,5	53	46	32	74	10	32	24	12
16	10	65	30	38	63	27	16	13	25	6,5	60	46	32	74	10	32	24	12

Ø (mm)	M_4	M_5	M_6	M_7	M_9	P_1	P_2	P_3	P_4	P_5	P_6	P_7	P_8	P_9	R	SW_1	SW_2	SW_3
12	10	22	54	51	M4	M4	15	8	5,2	5,5	4,5	4,5	7	8,5	6,5	8	10	19
16	12	22	54	51	M4	M4	15	8	5,2	5,5	4,5	4,5	7	8,5	6,5	8	10	19

ALMOTION B.V. Nijverheidsweg 14 | 6662 NG Elst (Gld) | The Netherlands t +31(0)85 0491 777 e info@almotion.nl
www.almotion.nl | www.lineairegeleiding.nl | www.lineairegeleidingshop.nl | www.linearmotion.nl

Slide Units for Cylinders

Slide Units for Cylinders ISO 6432 series UGLB

Standard dimensions

Type: **UGLB**
Ø 20 ÷ 25

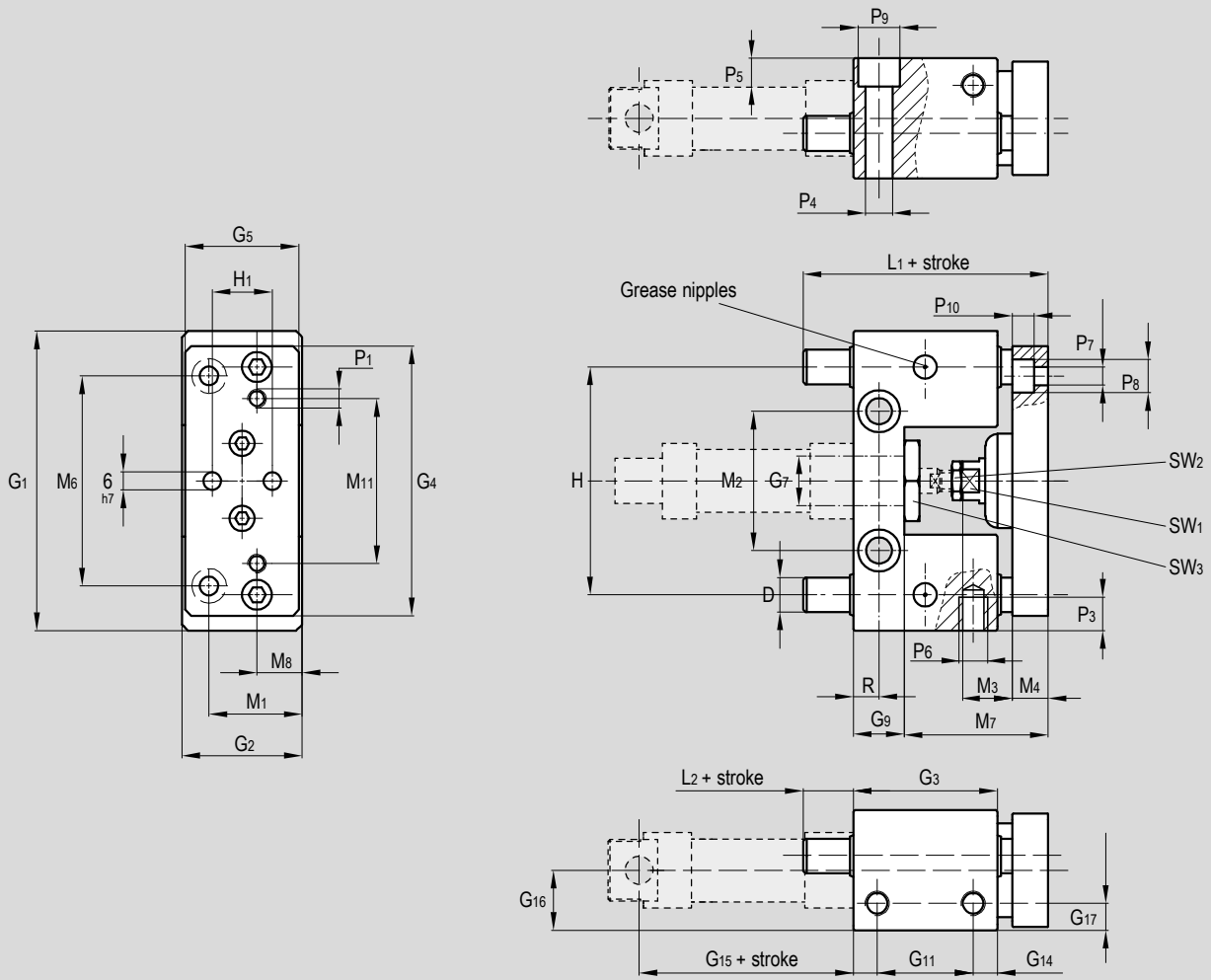

Ø (mm)	D	G_1	G_2	G_3	G_4	G_5	ØG_7	G_9	G_{11}	G_{14}	G_{15}	G_{16}	G_{17}	H	H_1	R	M_1	M_2	M_3
20	12	100	40	48	90	38	22	17	32	8	71	24	10	76	20	8,5	30	46,5	19
25	12	100	40	48	90	38	22	17	32	8	76	24	10	76	20	8,5	30	46,5	19

Ø (mm)	M_4	M_6	M_7	M_8	M_{11}	L_1	L_2	ØP_1	P_3	ØP_4	P_5	ØP_6	ØP_7	ØP_8	ØP_9	P_{10}	SW_1	SW_2	SW_3
20	12	70	48	15	55	75	12	M6	15	9	9	M8	6,5	11	14	7	13	13	27
25	12	70	54	15	55	83	12	M6	15	9	9	M8	6,5	11	14	7	13	17	27

ALMOTION B.V. Nijverheidsweg 14 | 6662 NG Elst (Gld) | The Netherlands t +31(0)85 0491 777 e info@almotion.nl
www.almotion.nl | www.lineairegeleiding.nl | www.lineairegeleidingshop.nl | www.linearmotion.nl

Slide Units for Cylinders

Slide Units for Cylinders ISO 6432 series UGPB - UGPS

Standard dimensions

Type: **UGPB, UGPS**

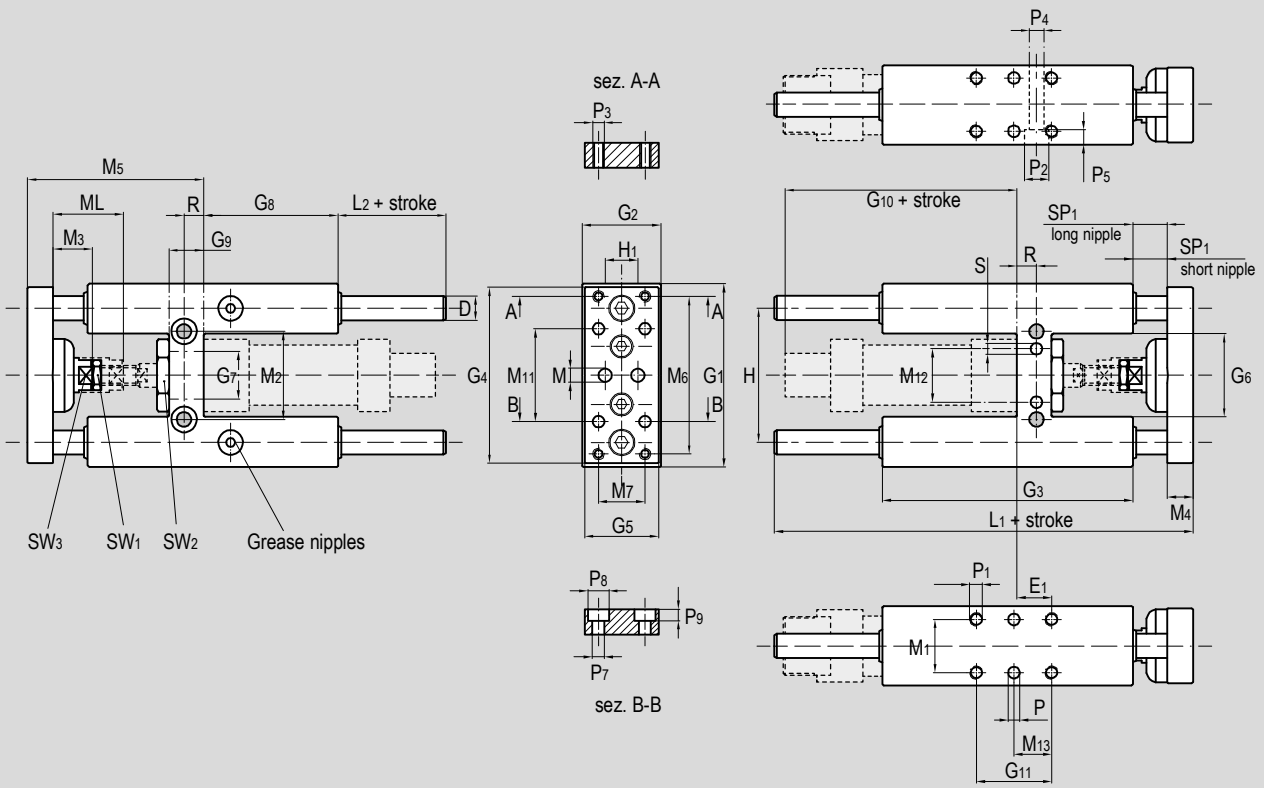

Ø (mm)	D	E_1	G_1	G_2	G_3	G_4	G_5	G_6	G_7	G_8	G_9	G_{10}	G_{11}	H	H_1	L_1	L_2	M_1	M_2	M_3	M_4	M_5	M_6
12	10	11	65	30	75	63	27	27	16	37	13	66	32,5	46	15	125	37	22	24	12	10	51	54
16	10	11	65	30	75	63	27	27	16	37	13	71	32,5	46	15	125	37	22	24	12	10	51	54
20	12	15	79	34	108	76	32	36	22	58	15	87	32,5	58	20	160	37	23	38	18	12	65	68
25	12	15	79	34	108	76	32	36	22	58	15	90	32,5	58	20	160	37	23	38	18	12	65	68

Ø (mm)	M_7	M h7	M_{11}	M_{12}	M_{13}	ML	P_1	P_2	P_3	P_4	P_5	P_7	P_8	P_9	P h7	S h7	R	SP	SP_1	SW_1	SW_2	SW_3
12	15	4	32	/	16,25	/	M4	8,5	M4	5,5	5,5	4,5	7	4,5	-	-	6,5	3	3	10	19	8
16	15	4	32	/	16,25	/	M4	8,5	M4	5,5	5,5	4,5	7	4,5	-	-	6,5	3	3	10	19	8
20	20	6	40	23	16,25	40	M6	10,5	M5	6,5	7	5,5	9	6	5	5	8,5	3	22	13	27	13
25	20	6	40	23	16,25	40	M6	10,5	M5	6,5	7	5,5	9	6	5	5	8,5	3	22	17	27	13

ALMOTION B.V. Nijverheidsweg 14 | 6662 NG Elst (Gld) | The Netherlands t +31(0)85 0491 777 e info@almotion.nl

www.almotion.nl | www.lineairegeleiding.nl | www.lineairegeleidingshop.nl | www.linearmotion.nl

Allowed load

Type: **UGLB**

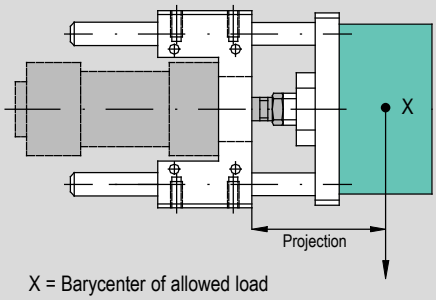

X = Barycenter of allowed load

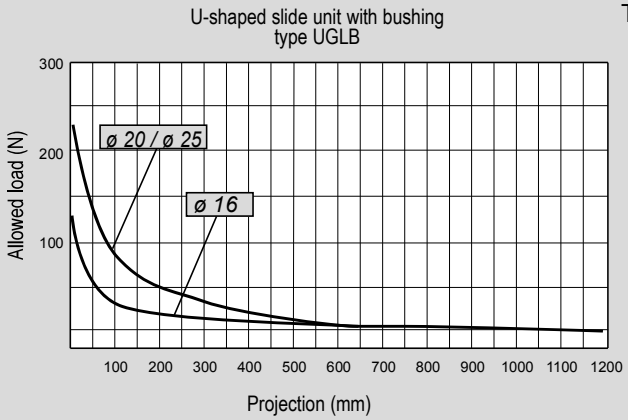

Type: **UGPB**

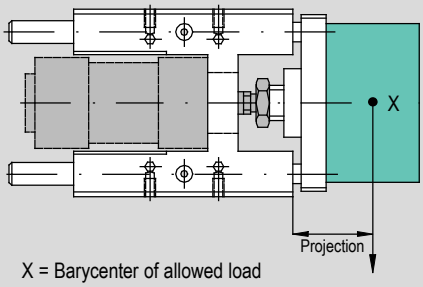

X = Barycenter of allowed load

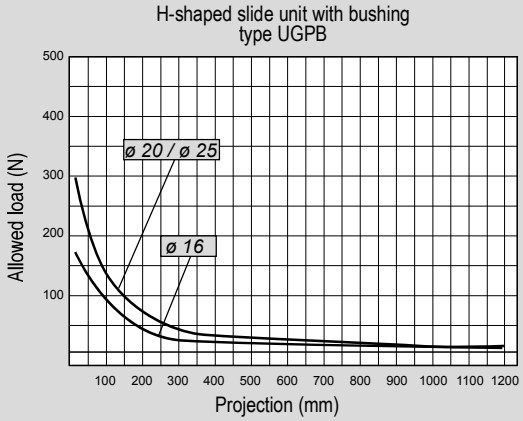

Type: **UGPS**

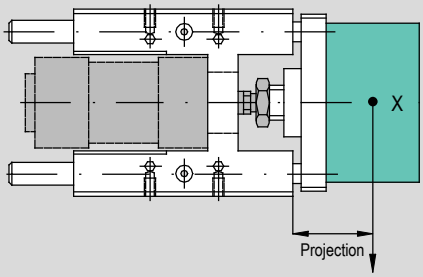

X = Barycenter of allowed load

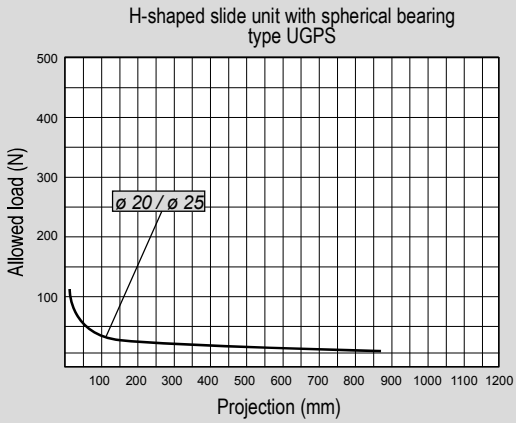

ALMOTION B.V. Nijverheidsweg 14 | 6662 NG Elst (Gld) | The Netherlands t +31(0)85 0491 777 e info@almotion.nl

www.almotion.nl | www.lineairegeleiding.nl | www.lineairegeleidingshop.nl | www.linearmotion.nl

Slide Units for Cylinders

Slide Units for Cylinders ISO 15552

Main features

32 ÷ 100
Bores Ø

UGLB
Type

32 ÷ 100
Bores Ø

UGPB
Type

32 ÷ 100
Bores Ø

UGPS
Type

Technical data

Type	UGLB	UGPB	UGPS
Description	U-shaped (for light loads) with sintered bronze bushings	H-shaped (for heavy loads) with sintered bronze bushings	H-shaped (for heavy loads) with spherical bearings
Bores	Ø 32 ÷ Ø 100		
Strokes	10 ÷2800 mm		
Temperature	-20°C ÷ +80°C		

Standard strokes

	UGLB Bore Ø mm					
Stroke mm	32	40	50	63	80	100
25						
50						
80						
100						
125						
160						
200						
250						
300						
320						
400						
500						

	UGPB - UGPS Bore Ø mm					
Stroke mm	32	40	50	63	80	100
25						
50						
80						
100						
125						
160						
200						
250						
300						
320						
400						
500						

Key
Standard stroke

ALMOTION B.V. Nijverheidsweg 14 | 6662 NG Elst (Gld) | The Netherlands t +31(0)85 0491 777 e info@almotion.nl
www.almotion.nl | www.lineairegeleiding.nl | www.lineairegeleidingshop.nl | www.linearmotion.nl

Slide Units for Cylinders

Slide Units for Cylinders ISO 15552 series UGLB

Standard dimensions

Type: **UGLB**

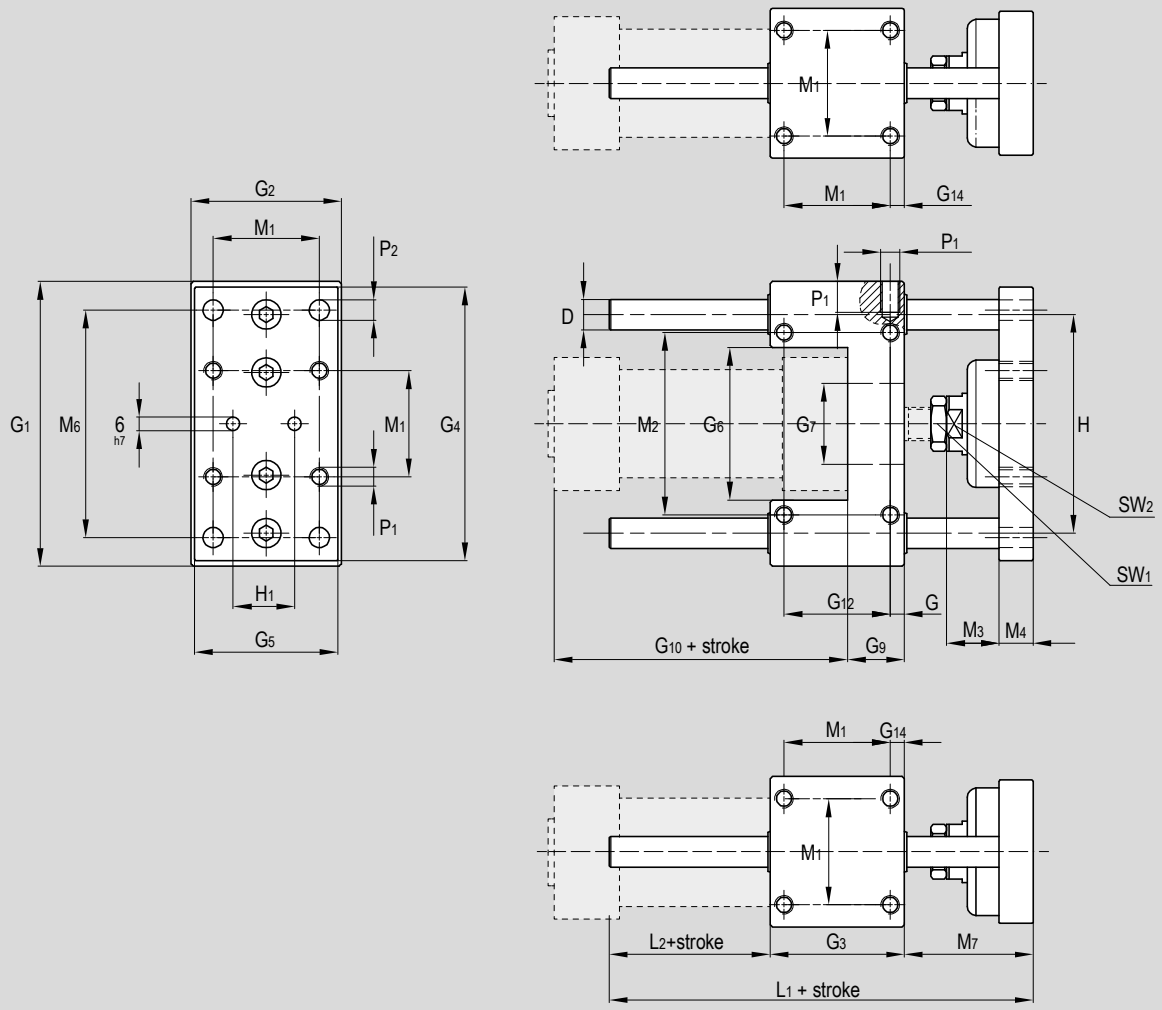

Ø (mm)	D	G	G_1	G_2	G_3	G_4	G_5	G_6	ØG_7	G_9	G_{10}	G_{12}	G_{14}	H	H_1	M_1	M_2	M_3	M_4	M_6	M_7	L_1	L_2	ØP_1	P_2	P_3	SW_1	SW_2
32	12	7,8	100	48	48	95	45	48	30	17	94	32,5	7,8	74	31	32,5	58	23	11	78	46	108	14	M6	6,5	12	15	17
40	12	10	106	56	58	101	53	64	35	21	105	38	10	80	36	38	64	23	15	84	52	120	10	M6	6,5	12	15	17
50	16	6,3	125	66	59	120	63	67	40	25	106	46,5	6,3	96	45	46,5	80	24	15	100	65	130	6	M8	8,5	15	22	24
63	16	9,8	132	76	76	127	73	76	45	25	121	56,5	9,8	104	45	56,5	95	24	15	105	65	145	4	M8	8,5	15	22	24
80	20	20	165	98	90	160	95	97	45	34	128	50	9	130	56	72	130	30	16	130	71	170	9	M10	11	18	27	27
100	20	20	185	118	110	180	115	117	55	39	138	70	10,5	150	56	89	150	30	18	150	71	190	9	M10	11	18	27	27

ALMOTION B.V. Nijverheidsweg 14 | 6662 NG Elst (Gld) | The Netherlands t +31(0)85 0491 777 e info@almotion.nl

www.almotion.nl | www.lineairegeleiding.nl | www.lineairegeleidingshop.nl | www.linearmotion.nl

Slide Units for Cylinders

Slide Units for Cylinders ISO 15552 series UGPB - UGPS

Standard dimensions

Type: **UGPB, UGPS**

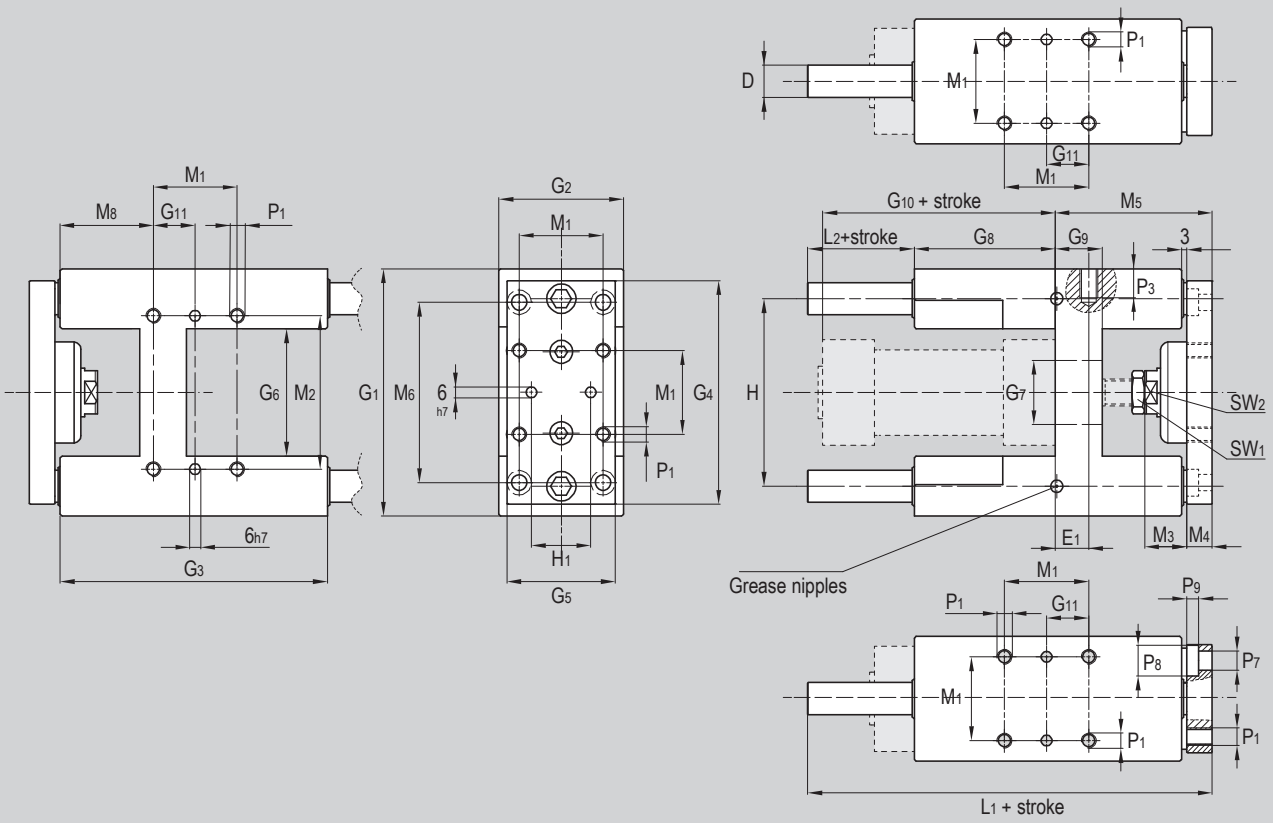

Ø (mm)	D	E_1	G_1	G_2	G_3	G_4	G_5	G_6	ØG_7	G_8	G_9	G_{10}	G_{11}	H	H_1	M_1	M_2	M_3	M_4	M_5	M_6	M_8	L_1	L_2	ØP_1	P_3	ØP_7	ØP_8	P_9	SW_1	SW_2
32	12	4,3	97	49	125	90	45	50,2	30	76	17	94	16,25	74	31	32,5	61	23	11	63	78	44,5	177	38	M6	10	6,5	10,5	6,5	15	17
40	16	11	115	58	139	110	54	58,2	35	81	21	105	19	87	36	38	69	23	15	76	84	47	192	35	M6	10	6,5	10,5	6,5	15	17
50	20	18,8	137	69	148	124	60	70,2	40	78	26	106	23,25	104	45	46,5	85	24	15	88	100	51,5	205	39	M8	16	8,5	13,5	9	22	24
63	20	15,3	152	85	178	145	79	85,2	45	107	26	121	28,25	119	45	56,5	100	24	15	89	105	55,7	237	41	M8	16	8,5	13,5	9	22	24
80	25	21	189	105	215	180	99	106	45	128	34	128	36	148	56	72	130	30	20	110	130	66	280	42	M10	18	11	18	11	27	27
100	25	24,5	213	129	220	200	120	131	55	128	39	138	44,5	172	56	89	150	30	20	115	150	67,5	280	37	M10	18	11	18	11	27	27

ALMOTION B.V. Nijverheidsweg 14 | 6662 NG Elst (Gld) | The Netherlands t +31(0)85 0491 777 e info@almotion.nl

www.almotion.nl | www.lineairegeleiding.nl | www.lineairegeleidingshop.nl | www.linearmotion.nl

Allowed load

Type: **UGLB**

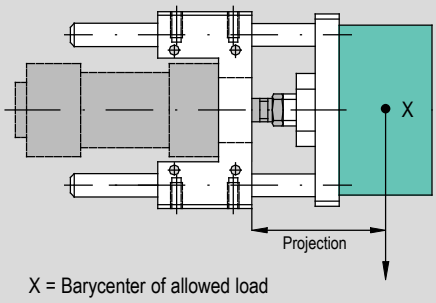

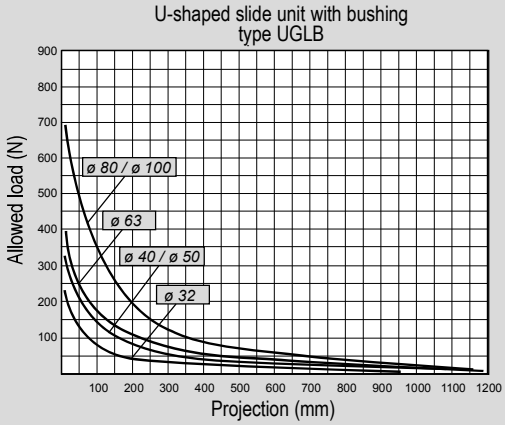

Type: **UGPB**

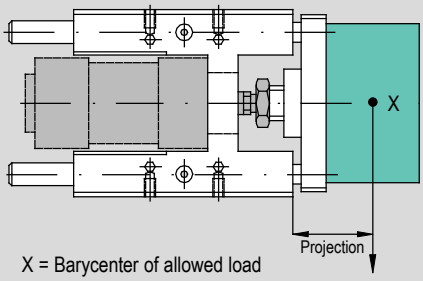

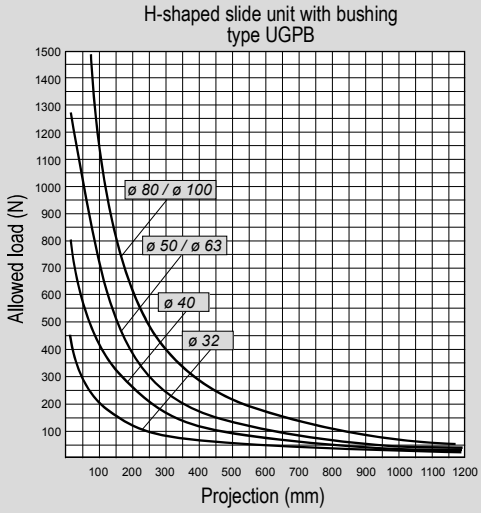

Type: **UGPS**

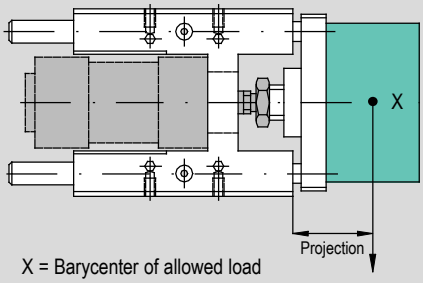

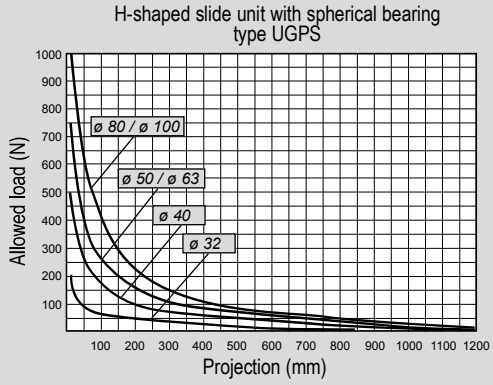

ALMOTION B.V. Nijverheidsweg 14 | 6662 NG Elst (Gld) | The Netherlands t +31(0)85 0491 777 e info@almotion.nl

www.almotion.nl | www.lineairegeleiding.nl | www.lineairegeleidingshop.nl | www.linearmotion.nl

Accessories for slide units for cylinders

Connecting bracket for rods

Per unità di guida Ø mm	Code	Item	Compliance
32	077901	SCSG032	-
40	077902	SCSG040	
50	077903	SCSG050	
63	077904	SCSG063	
80	077905	SCSG080	
100	077906	SCSG100	

ALMOTION B.V. Nijverheidsweg 14 | 6662 NG Elst (Gld) | The Netherlands t +31(0)85 0491 777 e info@almotion.nl

www.almotion.nl | www.lineairegeleiding.nl | www.lineairegeleidingshop.nl | www.linearmotion.nl