# "UCC" COAXIAL UNITS OIL FILLING OPERATIONS

Coaxial oil–pneumatic units "UCC" delivered by Almotion B.V. are pneumatic cylinders equipped with a closed oil circuit that allows speed regulations, unit stroke block or speed regulation bypass for quick exit or return.

UCC doeas not require particular maintenance, except for some cases in wich it may be necessary to refill oil circuit.
(Examples: Replacement of a valve or regulator, leaks due to external leakage)

Following some types of "UCC" with indicated two fundamental elements regarding these instructions.

A–Oil compensator (tank) with oil level rod.
B–Filling valve.

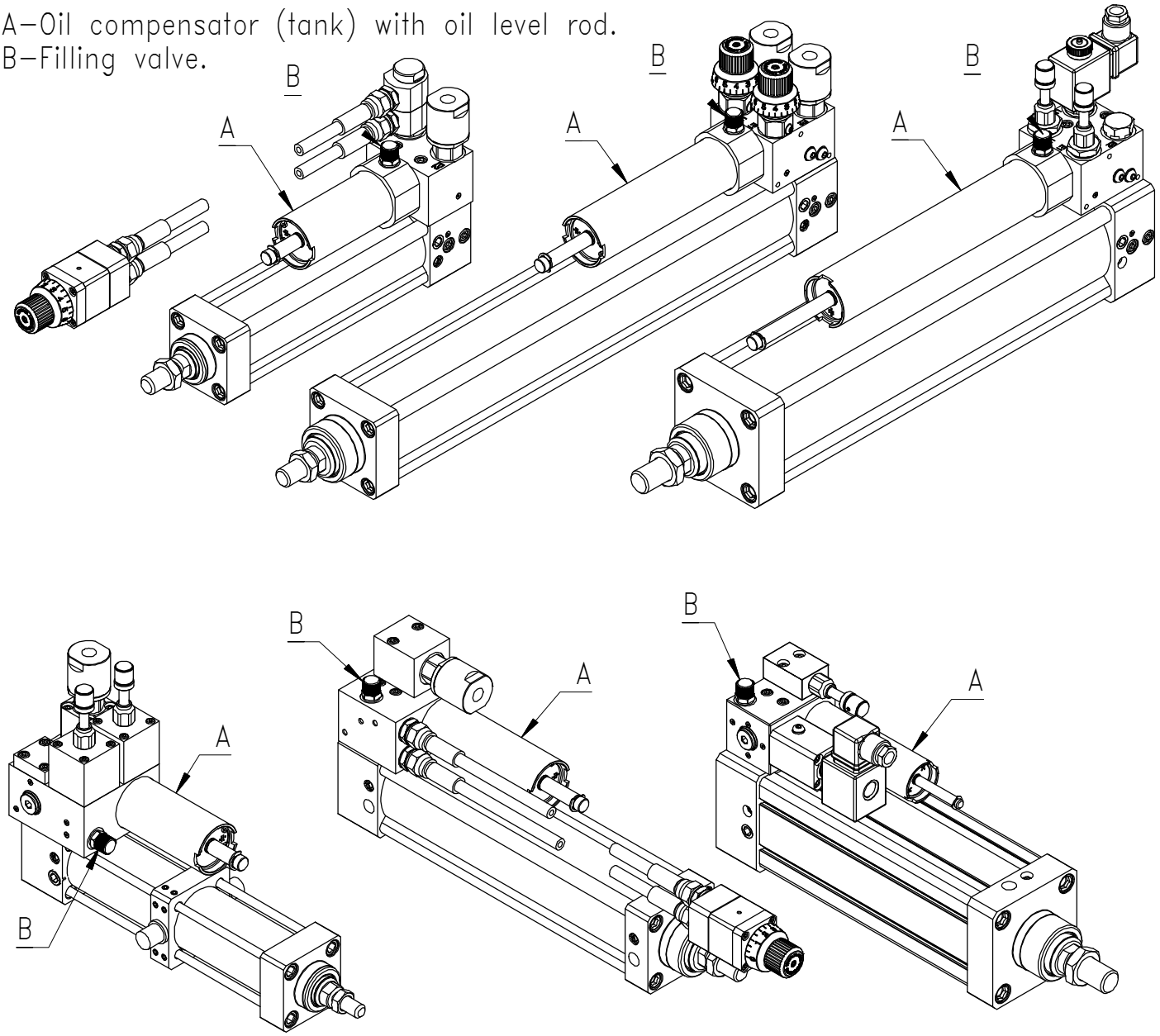

# "UCC" COAXIAL UNITS OIL FILLING OPERATIONS

UCC are supplied already loaded.
Oil type is indicated on the adhesive label positioned on the compensator (A).
With the cylinder completely closed (rod all inside) a notch for external seeger is visible from compensator cover (max level).

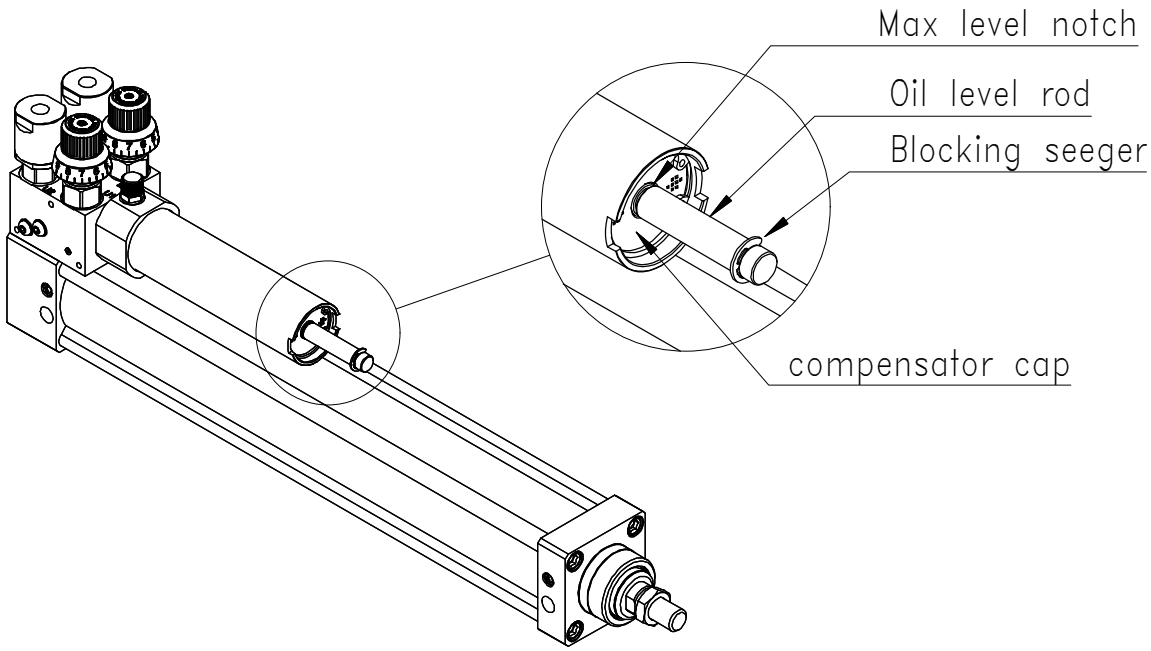


When the cylinder opens (rod comes out), the compensator rod retracts.
Compensator are sized to have a quantity of oil in excess of its real requirement, so in the event of small oil leaks the unit can still work.
In this case the second notch on compensator rod is not visible and unit need reintegration.

In the event of, during rod exit phase, the blocking seeger come into contact with compensator cover or the is fully or mosted retracted with closed cylinder, it is necessary to intervene by restoring correct oil level.

To carry out this simple operation, it will be necessary having compatible oil with the one in the unit (see adhesive label) and a loading syringe with conical connection 1/8"BSPP female thread.
(Available as accessories sold separately, order code: 8SIRINGA)

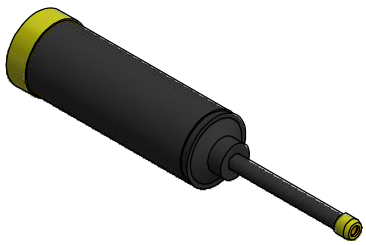

EV.0–23/03/22–N.P.

# "UCC" COAXIAL UNITS OIL FILLING OPERATIONS

OIL LOADING INSTRUCTIONS:

1–Retract all the cylinder air rod.
2–Remove filling valve protection cap.
3–Place the loading syringe on the valve and exercise adequate pressure to let the oil flow in the circuit or use a pressurized oil tank.
4–Pump oil until the second notch on compensator rod is visible. (Max oil level)
5–Make the cylinder perform a few complete maneuvers to make all the circuit oil filled. (Repeat point 3/4/5 if necessary)
6–In case of air presence in the oil circuit during operations use the two black screw on rear head of the cylinder, near air connection on the left, to let air out and then rescrew.
7–Refit the filling valve protection cap. (Clean oil leaked during operations)

