Regulator G 1/4

type / item	RP.11		
port size	G 1/4		
description	air line regulator with diaphragm and relieving feature		
mounting	arbitrary		
supply pressure	Pe max.16 bar		
reduced pressure	Pa 0,5-10 bar standard, 0,1-3 bar, 0,2-6 bar, 0,5-16 bar		
air consumption	2,6 l/min, depend upon secondary pressure		
media and ambient	max. 60°C		
temperature	(oth. temperature ranges available upon request)		
fixing	panel mounting, bracket or through		
	2 holes in the body		
weight	0,415 kg, (0,330 kg without gauge)		
	0,530 kg type with lock device		

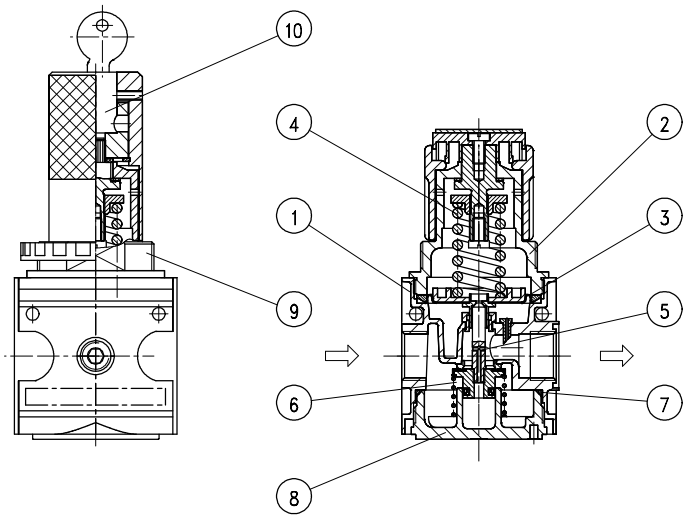

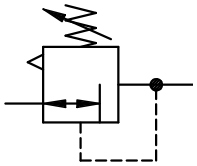

replacement parts

☞ **(repair kit: ESA-RP.11)**

no	description		material	order-no.
1	body		zinc - Z 410	---
2	spring cage	C.00-72	POM - Ms	8.2100.72.000
3	diaphragm assembly		NBR - Ms	☞
4	regulating spring 0-10 bar		St. - galvanized	5.2111.83.000
5	valve cone		NBR - Ms	☞
6	spring	C.11-87	niro	5.2111.87.000
7	O-ring 30 x 2		NBR	☞
8	bonnet	R.11-10	POM	3.1711.10.000
9	spring cage lockable		POM - Al	7.6211.72.200
10	lock cylinder	C.33-52	Ms	5.2133.52.000

series 1

ordering information

RP. ✶✶ ✶ ✶

type | 1 port size | 2 option | reduced pressure

ordering example: RP.11 G S 0,1-3

1	**port size**	
	11	G 1/4
2	**options**	
	G	gauge ø50
	S	panel mounting
	K	keylock

application information

- easy block assembly for components to be connected in series
- interlocking of several individual devices requires coupling kit(s) KP.11
- interlocking of several individual devices with narrow distributor Z.11, requires coupling kit(s) KP.11 Z
- adjusting knob can be locked by depressing

technical modifications keep in reserve!

dimensions (mm)

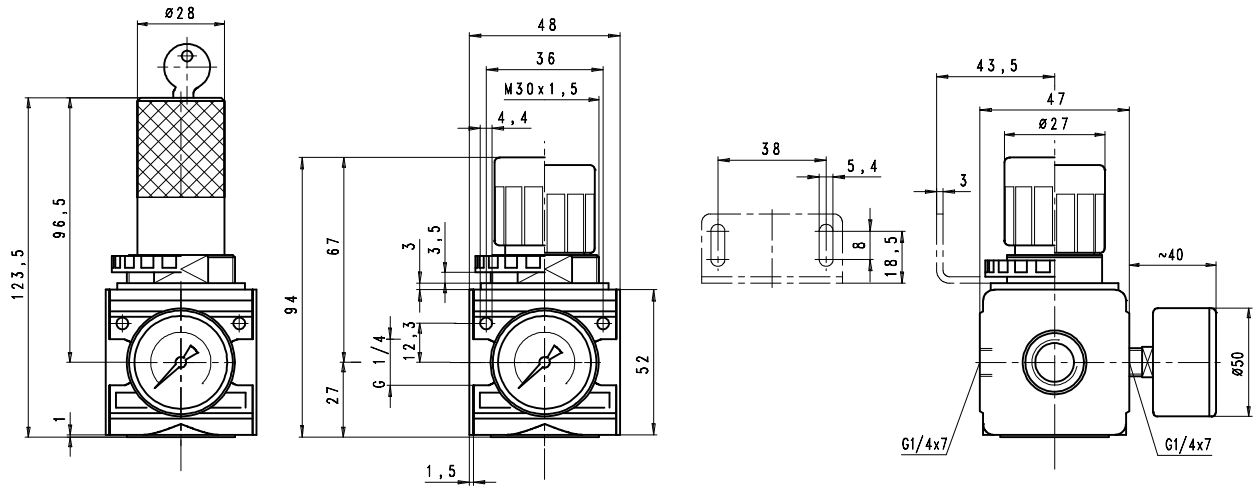

flow characteristics

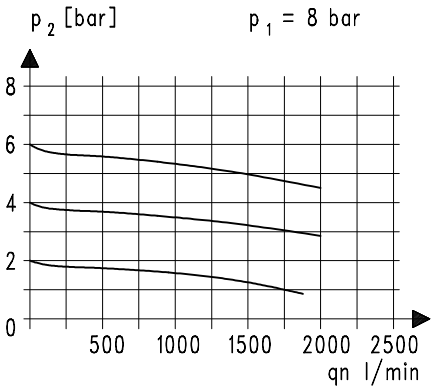

pressure characteristic

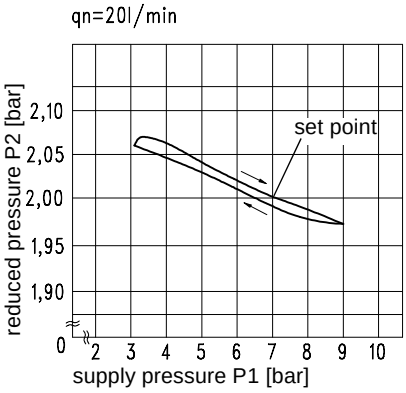

accessories

gauge

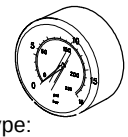

type:
G 50. 3/ 6 R
G 50. 6/10 R
G 50.10/16 R
G 50.16/25 R

spring

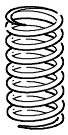

type:
0,1- 3: C.11-81
0,2- 6: C.11-82
0,5-16: C.11-66

panel mounting
M 30 x 1,5

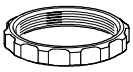

type: DR.00-34

mounting bracket

type: ZW.11

type: MW.30

technical modifications keep in reserve!