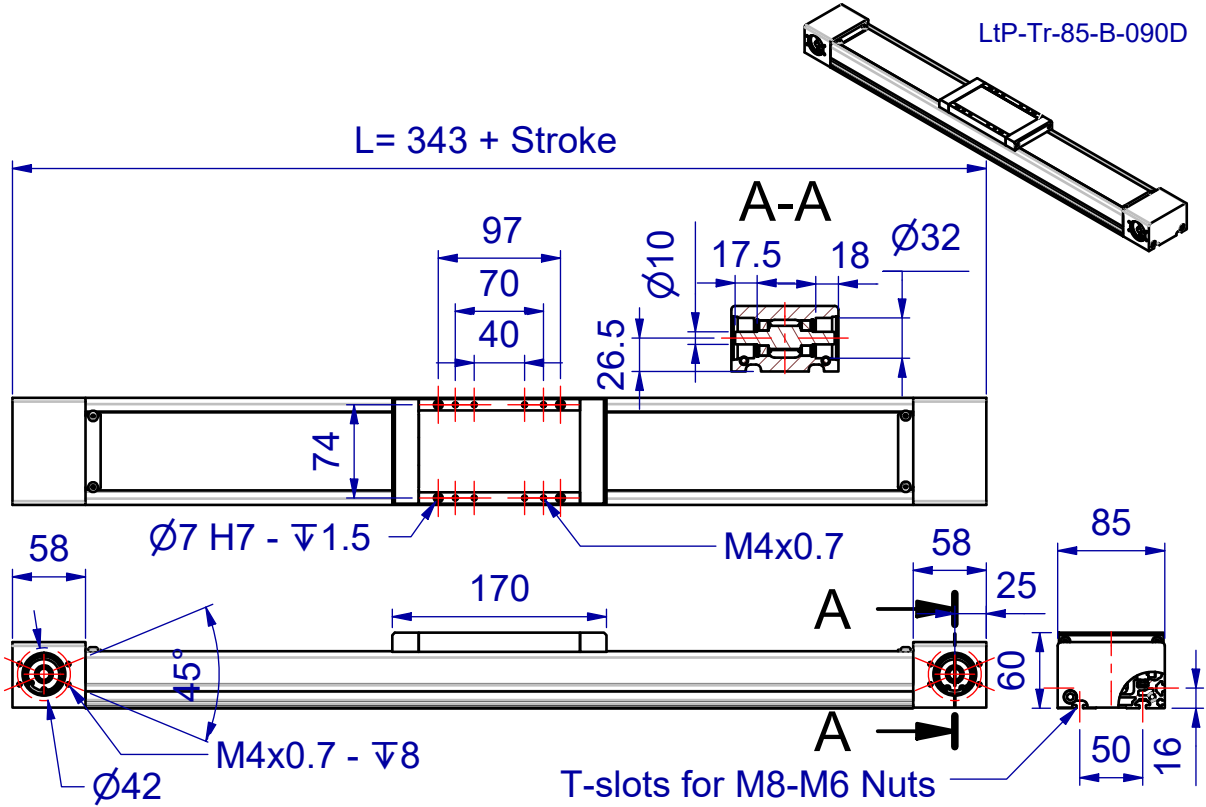
LtP-Tr-85-B-090D
L= 343 + Stroke
A-A
97
70
40
Ø10
17.5
18
Ø32
26.5
74
Ø7 H7 - ↧1.5
M4x0.7
58
170
58
25
85
A
A
45°
60
M4x0.7 - ↧8
Ø42
T-slots for M8-M6 Nuts
50
16