ALMOTION

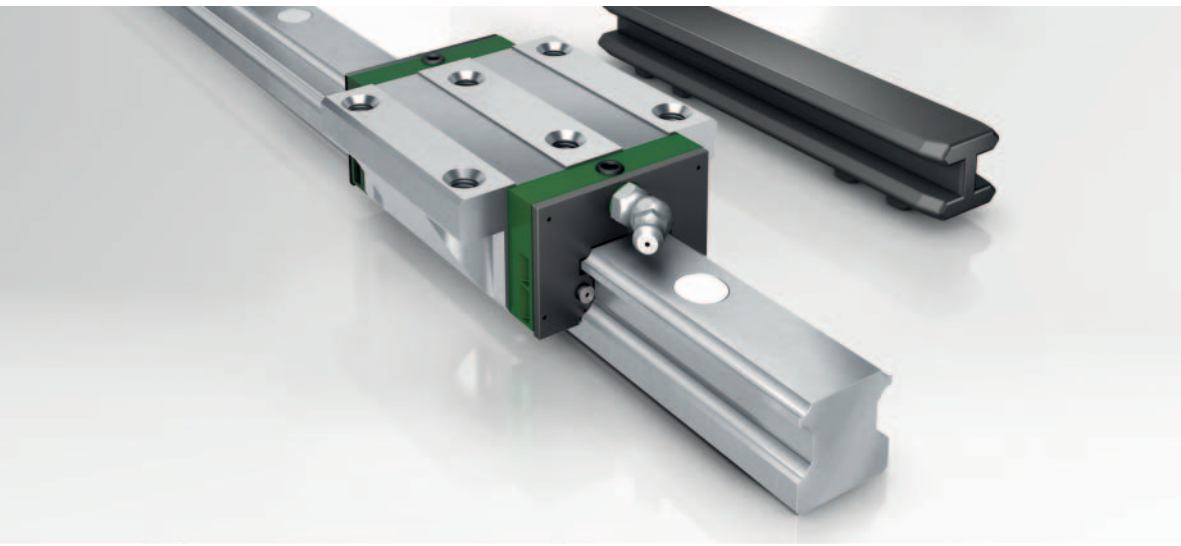

Six-row linear recirculating ball bearing and guideway assemblies

Carriages and guideways
Sealing and lubrication elements
Accessories

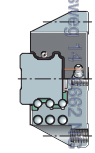

ALMOTION B.V. Nijverheidsweg 1 6662 Elst (Gld) | The Netherlands t +31(0)85 0491 777 e info@almotion.nl | www.almotion.nl | www.lineairegeleiding.nl | www.lineairegeleidingshop.nl | www.linearmotion.nl

ALMOTION

Six-row linear recirculating ball bearing and guideway assemblies

X-life
Carriages Guideways **206**

These linear recirculating ball bearing and guideway assemblies are, with their six rows of balls, the INA monorail guidance system based on balls with the highest load carrying capacity and highest rigidity.

The rolling elements are in two point contact with the raceways. The four outer rows of balls support compressive loads while the two inner rows of balls support tensile loads.

The guidance systems are preloaded in order to increase their rigidity.

Due to the modular concept, the guideways can be combined with all carriage types within one size.

Sealing and lubrication elements – system KIT **240**

For optimum lubrication and sealing, there is an extensive system of sealing and lubrication elements. The elements are configured as a KIT and are designed for various application conditions.

Accessories **258**

There is an extensive range of accessories for the six-row linear recirculating ball bearing and guideway assemblies.

These include closing plugs and covering strips for the guideways as well as a suitable fitting tool for rolling in the clip fit covering strip ADK (rolling-in device).

The braking and clamping element is a mechanical retaining system that is used, for example, where additional braking and clamping functions are required.

ALMOTION B.V. Nijverheidsweg 14 | 6662 NG Elst (Gld) | The Netherlands t +31(0)85 0491 777 e info@almotion.nl | www.almotion.nl | www.lineairegeleiding.nl | www.lineairegeleidingshop.nl | www.linearmotion.nl

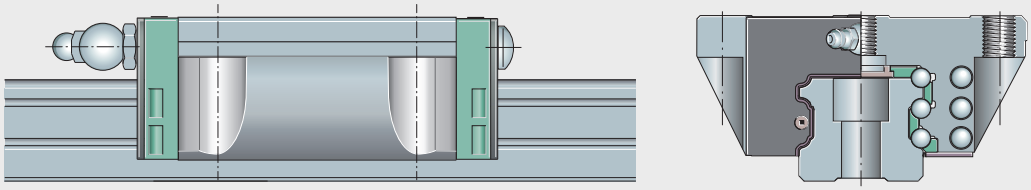

000B6638

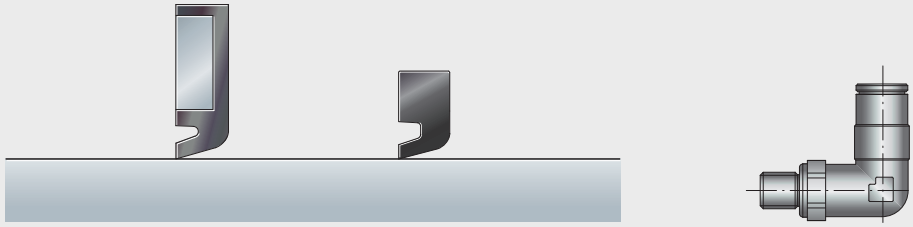

000B65E2

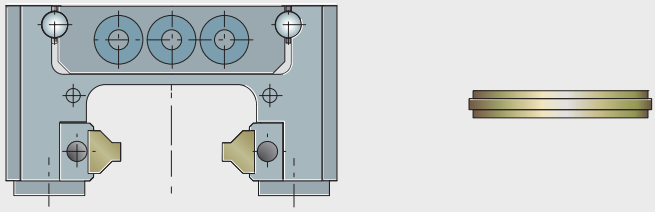

000B6641

ALMOTION B.V. Nijverheidsweg 1 | 5462 Elst (Gld) | The Netherlands t +31(0)85 0491 777 e info@almotion.nl | www.almotion.nl | www.lineairegeleiding.nl | www.lineairegeleidingshop.nl | www.linearmotion.nl

ALMOTION

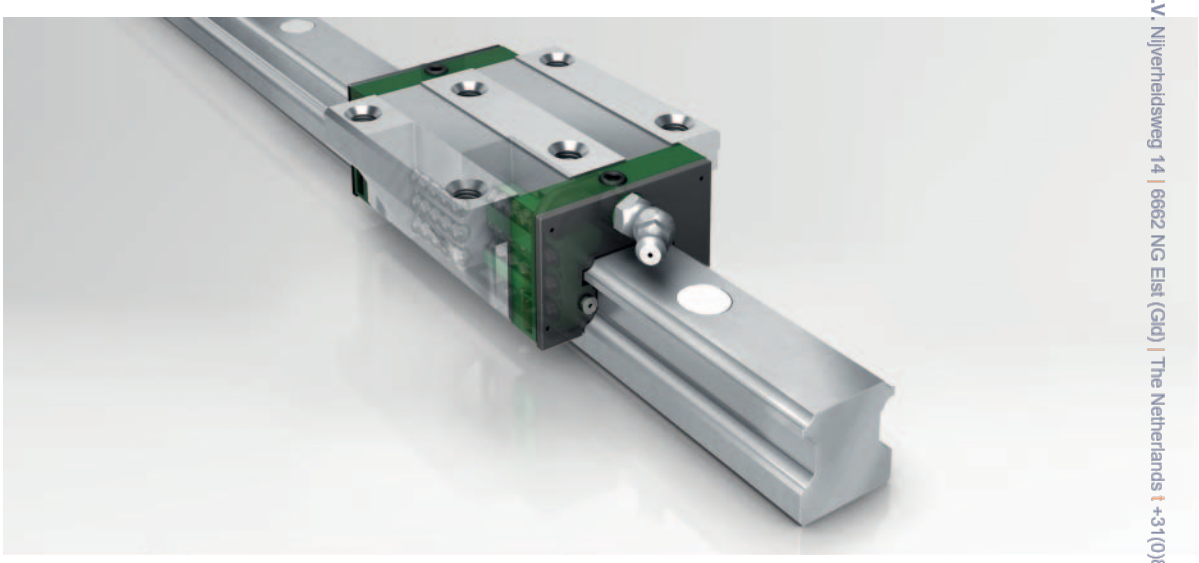

Six-row linear recirculating ball bearing and guideway assemblies

Carriages
Guideways

ALMOTION B.V. Nijverheidsweg 14 | 6662 NG Elst (Gld) | The Netherlands t +31(0)85 0491 777 e info@almotion.nl | www.almotion.nl | www.lineairegeleiding.nl | www.lineairegeleidingshop.nl | www.linearmotion.nl

ALMOTION

Six-row linear recirculating ball bearing and guideway assemblies

		Page
Product overview	Six-row linear recirculating ball bearing and guideway assemblies	208
Features	X-life	211
	Full complement	211
	Carriages	211
	Guideways	211
	Standard accessories	212
	Load carrying capacity	212
	Acceleration and velocity	213
	Interchangeability	213
	Sealing	213
	Lubrication	213
	Operating temperature	214
	Corrosion-resistant design	214
	Designs	214
Design and safety guidelines	Preload	215
	Friction	215
	Rigidity	215
	Hole patterns of guideways	218
	Demands on the adjacent construction	221
Accuracy	Accuracy classes	224
	Height sorting 2S	226
	Positional and length tolerances of guideways	227
Ordering example, ordering designation		228
Dimension tables	Six-row linear recirculating ball bearing and guideway assemblies, standard and L carriages	230
	Six-row linear recirculating ball bearing and guideway assemblies, H and HL carriages	234
	Guideways and closing methods	238

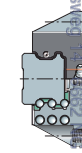

ALMOTION B.V. Nijverheidsweg 1 | 5962 Elst (Gld) | The Netherlands t +31(0)85 0491 777 e info@almotion.nl | www.almotion.nl | www.linearregeleiding.nl | www.linearregeleidingshop.nl | www.linearmotion.nl

ALMOTION

Six-row linear recirculating ball bearing and guideway assemblies

Full complement

For oil and grease lubrication

KUSE, KUSE..-L

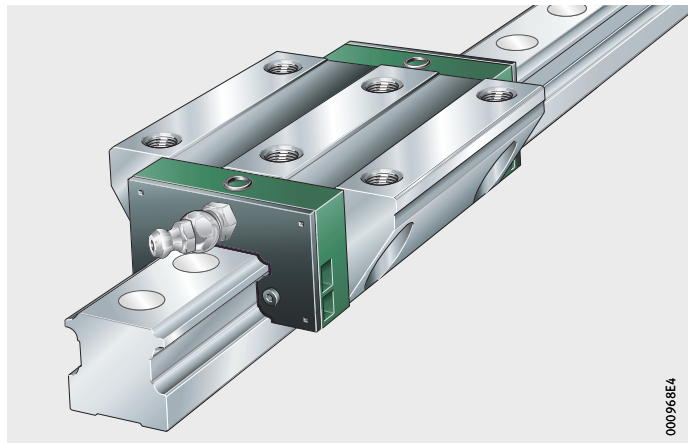

KUSE..-H, KUSE..-HL

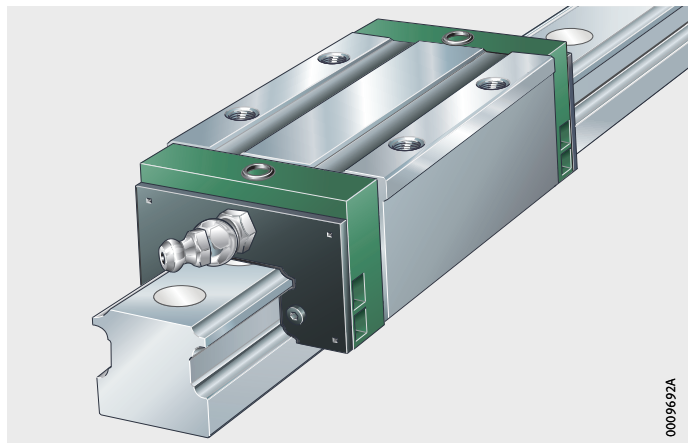

ALMOTION B.V. Nijverheidsweg 14 | 6662 NG Elst (Gld) | The Netherlands t +31(0)85 0491 777 e info@almotion.nl | www.almotion.nl | www.lineairegeleiding.nl | www.lineairegeleidingshop.nl | www.linearmotion.nl

Guideways

Standard

TKSD

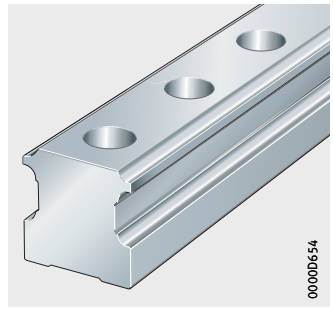

For screw mounting from below or with slot for covering strip

TKSD..-U

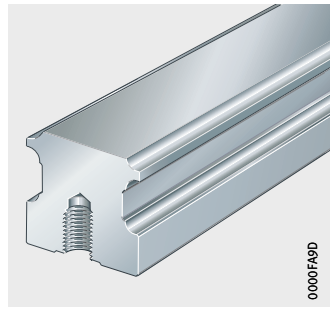

TKSD..-ADB, TKSD..-ADK

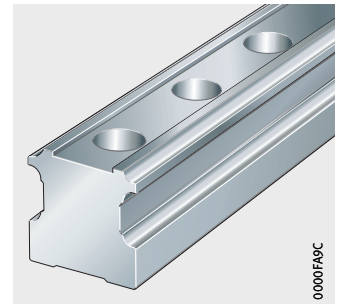

Standard accessories

Plastic closing plugs

Dummy guideway

KA..-TN

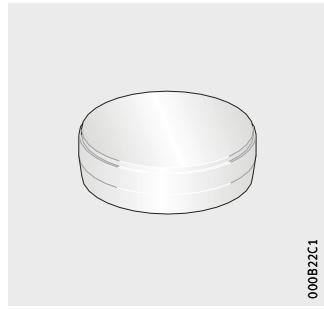

MKSD

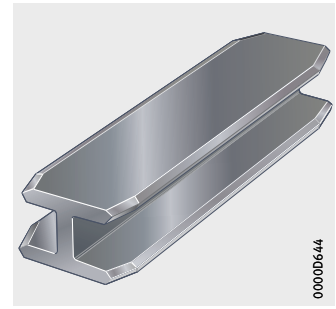

Lubrication connector

O rings

S

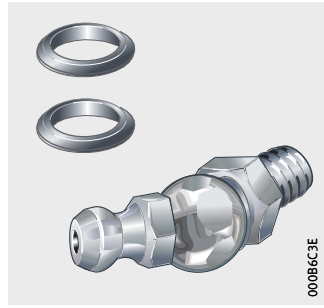

ALMOTION B.V. Nijverheidsweg 1 8162 Elst (Gld) | The Netherlands t +31(0)85 0491 777 e info@almotion.nl | www.almotion.nl | www.lineairegeleiding.nl | www.lineairegeleidingshop.nl | www.linearmotion.nl

Product overview

Six-row linear recirculating ball bearing and guideway assemblies

Mounting manual

MON 22

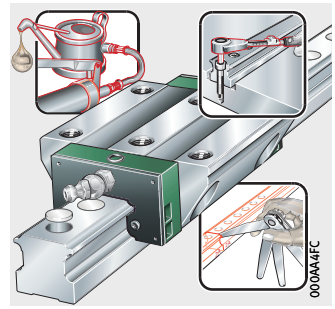

ALMOTION B.V. Nijverheidsweg 14 | 6662 NG Elst (Gld) | The Netherlands t +31(0)85 0491 777 e info@almotion.nl | www.almotion.nl | www.lineairegeleiding.nl | www.lineairegeleidingshop.nl | www.linearmotion.nl

ALMOTION

Six-row linear recirculating ball bearing and guideway assemblies

Features

Linear recirculating ball bearing and guideway assemblies KUSE are full complement, preloaded units that are used in applications with long unrestricted strokes, very high loads and very high rigidity.

A guidance system comprises at least one carriage supplied fitted with a lubrication connector, one guideway, one dummy guideway, plastic closing plugs and O rings for sealing off the upper relubrication holes.

X-life

In linear recirculating ball guidance systems, the entry zones – the area in which the rolling elements enter the saddle plate up to full load – are considered as areas determining the rating life. They ensure that the load is applied to the rolling element not abruptly but steadily, which gives a more uniform load distribution.

Through optimisation of the entry zone geometry, the six-row linear recirculating ball bearing and guideway assembly KUSE has not only smaller stroke pulsation but also achieves a significant increase in the basic load ratings according to its size and series in comparison with the conventional design.

Full complement

Since they have the maximum possible number of rolling elements, full complement guidance systems have extremely high load carrying capacity and particularly high rigidity.

Carriages

The carriages have saddle plates made from hardened steel and the rolling element raceways are precision ground. The balls are recirculated in enclosed channels with plastic return elements.

Favourably positioned lubrication pockets in the carriage provide a generous grease reservoir and advantageous lubrication, see page 213.

Guideways

The guideways are made from hardened steel and are ground on all faces, the rolling element raceways are precision ground.

Location from above or below

Guideways TKSD.. (-ADB, -ADK) are located from above and have through holes with counterbores for the fixing screws. Guideways TKSD..-U are located from below and have threaded blind holes.

Slot for covering strip

Guideways TKSD..-ADB have a slot for the adhesive bonded steel covering strip ADB. Guideways TKSD..-ADK have a slot with undercut for the clip fit steel covering strip ADK, see dimension table.

Multi-piece guideways

If the required guideway length l_{max} is greater than the value in the dimension tables, the guideways are supplied as several segments, see page 220.

ALMOTION B.V. Nijverheidsweg 1 5962 Elst (Gld) | The Netherlands t +31(0)85 0491 777 e info@almotion.nl | www.almotion.nl | www.lineairegeleiding.nl | www.lineairegeleidingshop.nl | www.linearmotion.nl

Six-row linear recirculating ball bearing and guideway assemblies

Standard accessories

As standard, the scope of delivery includes various accessory parts.

Dummy guideway

The dummy guideway prevents damage to the rolling element set and prevents the rolling elements from falling out while the carriage is separated from the guideway.

Carriages are always pushed directly from the guideway onto the dummy guideway and must remain there until they are remounted.

Plastic closing plugs

The closing plugs close off the counterbores of the guideway holes flush with the surface of the guideway.

Optionally, brass closing plugs are also available, see dimension table.

Lubrication connector and O rings

A lubrication connector for relubrication from the end is included already fitted.

O rings for sealing purposes if relubrication is carried out from above via the adjacent construction are included in the delivery.

Load carrying capacity

The linear recirculating ball bearing and guideway assemblies have six rows of balls. The four outer rows have a contact angle of 45° and the two inner rows have a contact angle of 60° to the raceways, *Figure 1*.

Four rows of balls support compressive loads while two rows of balls support tensile loads and all six rows support lateral loads.

The units can support loads from all directions, except in the direction of motion, and moments about all axes, *Figure 1*.

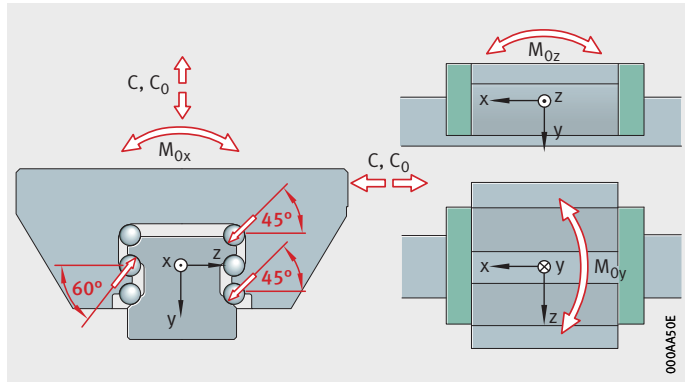

Figure 1
Load carrying capacity and contact angle

ALMOTION B.V. Nijverheidsweg 14 | 6662 NG Elst (Gld) | The Netherlands t +31(0)85 0491 777 e info@almotion.nl | www.almotion.nl | www.lineairegeleiding.nl | www.lineairegeleidingshop.nl | www.linearmotion.nl

Acceleration and velocity

Six-row linear recirculating ball bearing and guideway assemblies KUSE permit accelerations up to 150 m/s^2 and velocities up to 5 m/s, see table.

Operating limits

Designation	Acceleration up to m/s^2	Velocity up to m/s
KUSE	150	5

Interchangeability

Carriages KWSE and guideways TKSD are interchangeable in any combination within one size, preload class and accuracy class.

Sealing

Elastic end wipers are fitted to the end pieces of the carriages on both sides to retain the lubricant within the system. Size 45 is fitted on both sides with non-contact, corrosion-resistant end plates.

Standard sealing strips ensure reliable sealing and protect the rolling element system against contamination, even in critical environmental conditions, *Figure 2*, page 214.

Under extremely heavy contamination load, additional wipers can be fitted, see page 244. Where necessary, additional covers must be used.

Lubrication

Six-row linear recirculating ball bearing and guideway assemblies KUSE are suitable for oil and grease lubrication. A lubrication connector for grease lubrication from the end is included already fitted. Optionally, other lubrication connectors are available, see page 254.

Lubrication is carried out via lubrication connectors in the end face of the end piece or from above via the adjacent construction and the lubrication holes in the end pieces. Observe the mounting manual MON 22.

ALMOTION B.V. Nijverheidsweg 1 7462 Elst (Gld) | The Netherlands t +31(0)85 0491 777 e info@almotion.nl | www.almotion.nl | www.lineairegeleiding.nl | www.lineairegeleidingshop.nl | www.linearmotion.nl

Six-row linear recirculating ball bearing and guideway assemblies

It must be ensured that the adjacent construction completely covers the carriage (including the end pieces) and the O rings for sealing off the relubrication hole from above are inserted, *Figure 2*. Otherwise, lubricant may escape through the upper lubrication hole.

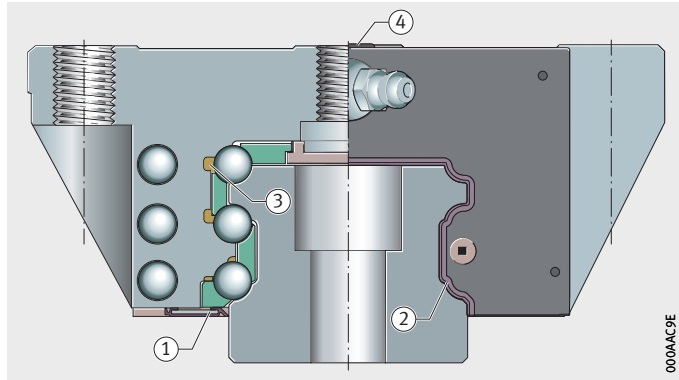

① Standard sealing strips
② Elastic wipers
③ Lubricant pockets and grease reservoir
④ O ring

Figure 2
Sealing strips, wipers, lubricant reservoir

If lubrication connectors are fitted, the maximum permissible screw depth must be observed, see dimension tables. If additional sealing elements KIT, the screw depth is increased. The standard lubrication connector is then no longer usable. Suitable lubrication connectors must additionally be taken into consideration when ordering, see page 254.

Operating temperature

As standard, six-row linear recirculating ball bearing and guideway assemblies KUSE can be used at operating temperatures from –10 °C to +80 °C.

Corrosion-resistant design

Six-row linear recirculating ball bearing and guideway assemblies KUSE are available in the accuracy class G3 and preload class V1 or V2 and also in a corrosion-resistant design with the special coating Corrotect, see page 57.

Designs

Six-row linear recirculating ball bearing and guideway assemblies KUSE are available in four designs, see table.

Available designs

Design	Description
–	Standard carriage
H	High carriage
HL	High, long carriage
L	Long carriage

ALMOTION B.V. Nijverheidsweg 14 | 6662 NG Elst (Gld) | The Netherlands t +31(0)85 0491 777 e info@almotion.nl | www.almotion.nl | www.lineairegeleiding.nl | www.lineairegeleidingshop.nl | www.linearmotion.nl

Design and safety guidelines

Preload

Linear recirculating ball bearing and guideway assemblies KUSE are available in the preload classes V0, V1 and V2, see table.

Preload classes

Preload class	Preload setting
V0	Very small clearance to clearance-free
V1[1)]	$0{,}04 \cdot C_{II}$[2)]
V2	$0{,}13 \cdot C_{II}$[2)]

1) Standard preload class.

2) Basic dynamic load rating of the central rows of balls.

Influence of preload on the linear guidance system

The preload of a linear guidance system defines the rigidity of the system. The six-row linear recirculating bearing and guideway assembly KUSE can be obtained in the preload classes V0 to V2, where the preload class V1 is the standard preload class.
If special requirements are present, the alternative preload classes may be used.

Increasing the preload increases the rigidity of the guidance system. The preload influences not only the rigidity but also the displacement force of the guidance system. The higher the preload, the larger the displacement force. Furthermore, preload also influences the operating life of the guidance system.

Friction

The coefficient of friction is dependent on the ratio C/P, see table.

Coefficient of friction

Load C/P		Coefficient of friction μ_{KUSE}	
from	to	from	to
4	20	0,001	0,002

Rigidity

The deflection curves show the deformation of the linear recirculating ball bearing and guideway assemblies KUSE, including the deformation of the screw connections to the adjacent construction, *Figure 3*, page 216, to *Figure 6*, page 217.

! The rigidity curves are valid only for screw mounting in accordance with the mounting manual MON 22 and the standard preload class V1.

ALMOTION B.V. Nijverheidsweg 14 1662 HB Elst (Gld) | The Netherlands t +31(0)85 0491 777 e info@almotion.nl | www.almotion.nl | www.lineairegeleiding.nl | www.lineairegeleidingshop.nl | www.linearmotion.nl

Six-row linear recirculating ball bearing and guideway assemblies

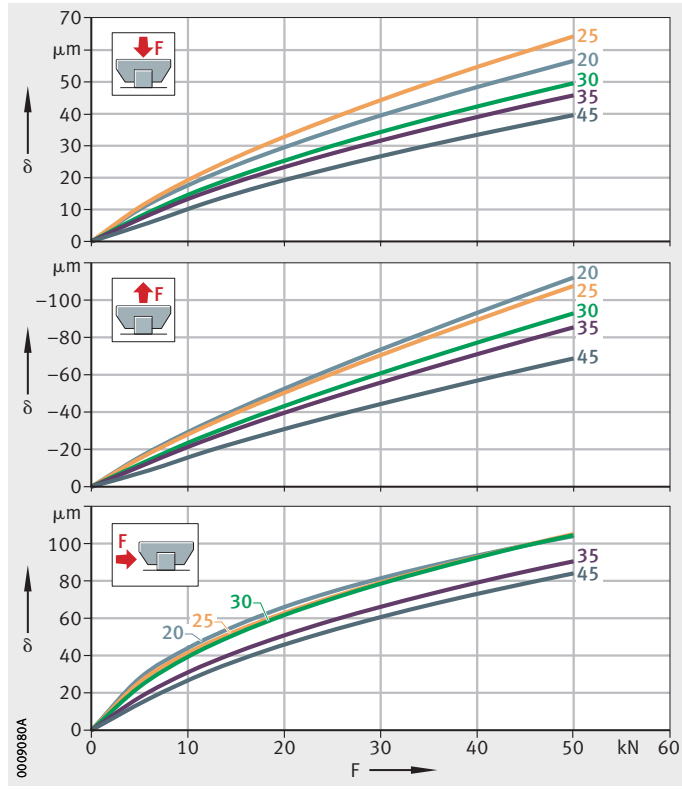

KUSE20
KUSE25
KUSE30
KUSE35
KUSE45

δ = deflection
F = load

Figure 3
Deflection curves for compressive, tensile and lateral load

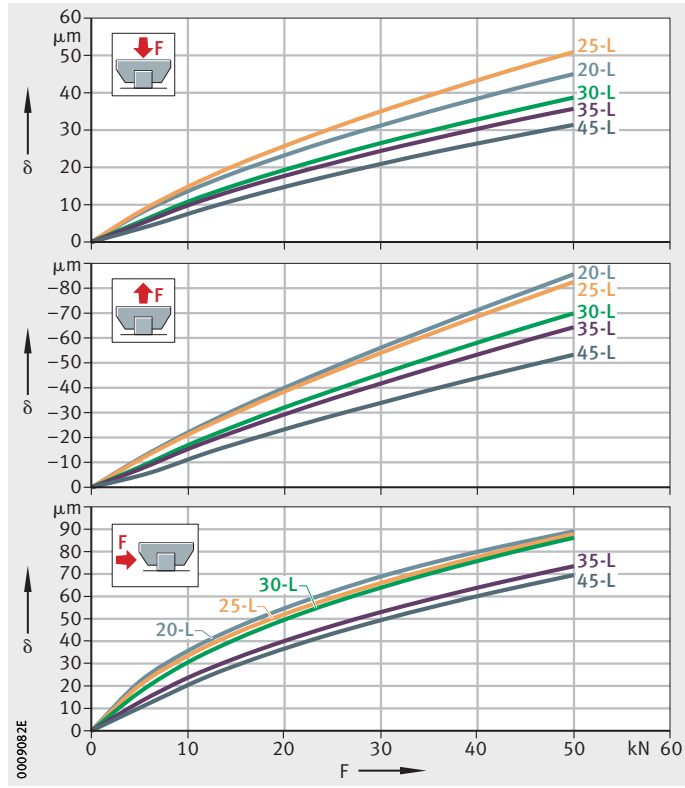

KUSE20-L
KUSE25-L
KUSE30-L
KUSE35-L
KUSE45-L

δ = deflection
F = load

Figure 4
Deflection curves for compressive, tensile and lateral load

ALMOTION B.V. Nijverheidsweg 14 | 6662 NG Elst (Gld) | The Netherlands t +31(0)85 0491 777 e info@almotion.nl | www.almotion.nl | www.lineairegeleiding.nl | www.lineairegeleidingshop.nl | www.linearmotion.nl

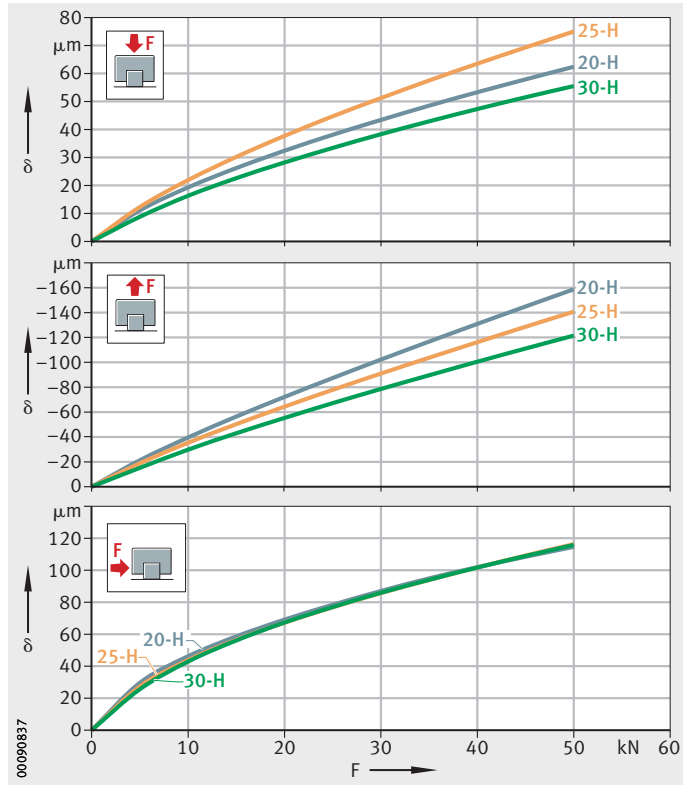

KUSE20-H
KUSE25-H
KUSE30-H

δ = deflection
F = load

Figure 5
Deflection curves for compressive, tensile and lateral load

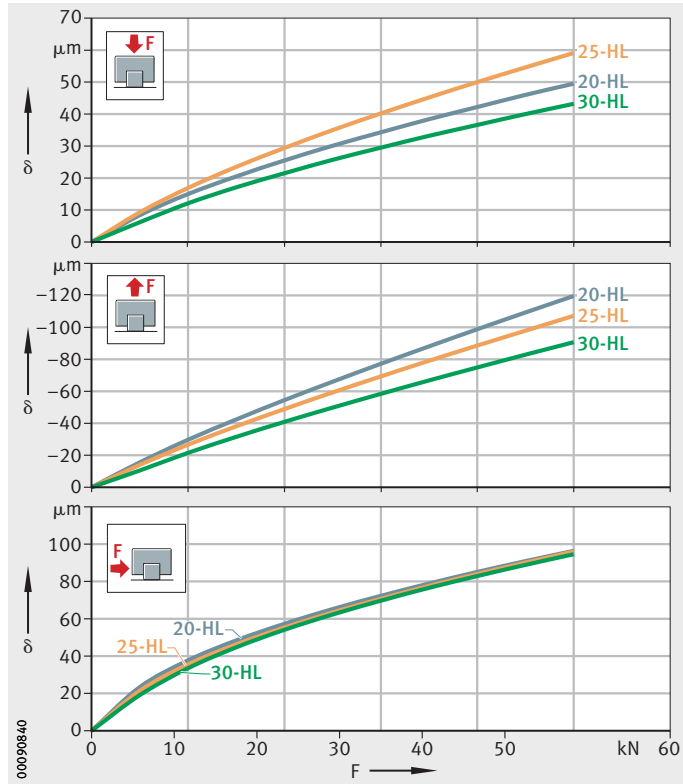

KUSE20-HL
KUSE25-HL
KUSE30-HL

δ = deflection
F = load

Figure 6
Deflection curves for compressive, tensile and lateral load

ALMOTION B.V. Nijverheidsweg 14 6662 NE Elst (Gld) | The Netherlands t +31(0)85 0491 777 e info@almotion.nl | www.almotion.nl | www.lineairegeleiding.nl | www.lineairegeleidingshop.nl | www.linearmotion.nl

Six-row linear recirculating ball bearing and guideway assemblies

Hole patterns of guideways

Unless specified otherwise, the guideways have a symmetrical hole pattern, where $a_L = a_R$, *Figure 7*.

An asymmetrical hole pattern may also be available upon request. In this case, $a_L \geqq a_{L\,min}$ and $a_R \geqq a_{R\,min}$, *Figure 7*.

Irrespective of the orientation of the locating face, a_L is on the left and a_R on the right, *Figure 7*. When ordering, the required orientation of the locating face (top or bottom) must be indicated.

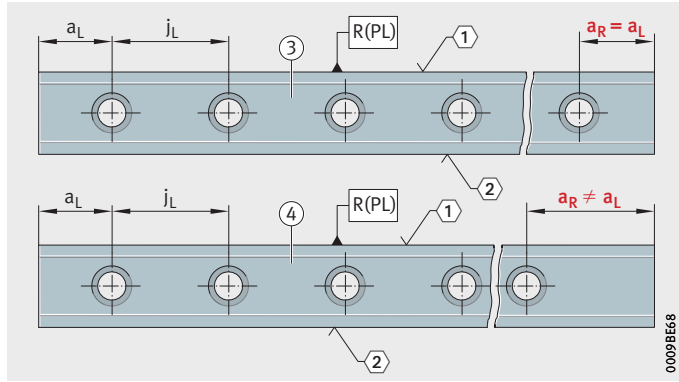

① Locating face
② Marking
③ Symmetrical hole pattern
④ Asymmetrical hole pattern

Figure 7
Hole patterns of guideways with one row of holes

ALMOTION B.V. Nijverheidsweg 14 | 6662 NG Elst (Gld) | The Netherlands t +31(0)85 0491 777 e info@almotion.nl | www.almotion.nl | www.lineairegeleiding.nl | www.lineairegeleidingshop.nl | www.linearmotion.nl

Maximum number of pitches between holes

The number of pitches between holes is the rounded whole number equivalent to:

$$n = \frac{l - 2 \cdot a_{L\,min}}{j_L}$$

The spacings a_L and a_R are generally determined as follows:

$$a_L + a_R = l - n \cdot j_L$$

For guideways with a symmetrical hole pattern:

$$a_L = a_R = \frac{1}{2} \cdot \left(l - n \cdot j_L\right)$$

Number of holes:

$$x = n + 1$$

a_L, a_R mm
Spacing between the start and the end of the guideway and the nearest hole, *Figure 7*, page 218

$a_{L\,min}$, $a_{R\,min}$ mm
Minimum values for a_L, a_R, see dimension tables

l mm
Guideway length

n –
Maximum possible number of pitches between holes

j_L mm
Spacing between holes

x –
Number of holes.

If the minimum values for a_L and a_R are not observed, the counterbores of the holes may be intersected. Risk of injury.

ALMOTION B.V. Nijverheidsweg 14 6662 Elst (Gld) | The Netherlands t +31(0)85 0491 777 e info@almotion.nl | www.almotion.nl | www.lineairegeleiding.nl | www.lineairegeleidingshop.nl | www.linearmotion.nl

Six-row linear recirculating ball bearing and guideway assemblies

Multi-piece guideways

If the guideway length required is greater than l_{max}, see dimension tables, or joined guideways are required, these guideways are made up from segments that together comprise the total required length. The segments are matched to each other and marked, *Figure 8*. The pitch is always located centrally between the fixing holes.

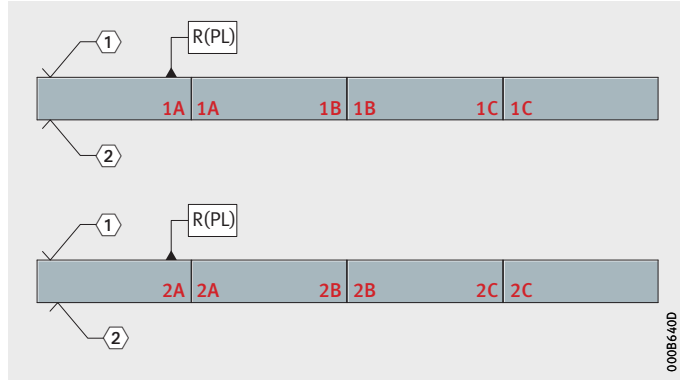

① Locating face
② Marking

Guideway segments:
1A, 1A 1B, 1B 1C, 1C
2A, 2A 2B, 2B 2C, 2C

Figure 8
Marking of multi-piece guideways

In the case of multi-piece guideways, the gap at the end faces between two segments must be $< 0{,}05$ mm.

Guideways suitable for joining as required

If partial guideway lengths ($l < l_{max}$) are to be combined with each other to form a guideway set as requested by the customer, the following postscript must be added to the order for the relevant guideway segment: “Guideway suitable for joining as required”.

If the guideway segment is an end segment, it is recommended that the guideway end has a chamfer, in order to make it easier to slide the carriages onto the guideway and protect the seals against damage. In this case, the position of the chamfer (left or right) and the position of the locating face (top or bottom) must be taken into consideration when ordering.

This design facilitates easier logistics.

ALMOTION B.V. Nijverheidsweg 14 | 6662 NG Elst (Gld) | The Netherlands t +31(0)85 0491 777 e info@almotion.nl | www.almotion.nl | www.lineairegeleiding.nl | www.lineairegeleidingshop.nl | www.linearmotion.nl

Demands on the adjacent construction

The running accuracy is essentially dependent on the straightness, accuracy and rigidity of the fit and mounting surfaces.

The straightness of the system can be achieved most easily when the guideway is pressed against a locating face.

If the guideway cannot be aligned as recommended by means of locating faces or very high requirements are placed on the running accuracy, the guideway straightness must be restricted.
The following postscript must be added to the order: “Restricted guideway straightness”.

Geometrical and positional accuracy of the mounting surfaces

The higher the requirements for accuracy and smooth running of the guidance system, the more attention must be paid to the geometrical and positional accuracy of the mounting surfaces.

Observe the tolerances for the mounting surfaces and parallelism of mounted guideways, *Figure 9*, page 222, and table, page 223.

Surfaces should be ground or precision milled with the objective of achieving a mean roughness value Ramax 1,6.

Any deviations from the stated tolerances will impair the overall accuracy, alter the preload and reduce the operating life of the guidance system.

Height difference ΔH

For ΔH, permissible values are in accordance with the following equation:

$$\Delta H = a \cdot b$$

ΔH µm
Maximum permissible deviation from the theoretically precise position, *Figure 9*, page 222

a –
Factor, dependent on the preload class, see table

b mm
Centre distances between guidance elements.

Factor a

Preload class	Factor a
V0	0,2
V1[1)]	0,2
V2	0,1

1) Standard preload class.

Observe the guidelines in the mounting manual MON 22 for KUSE.

ALMOTION B.V. Nijverheidsweg 14 1662 LB Elst (Gld) | The Netherlands t +31(0)85 0491 777 e info@almotion.nl | www.almotion.nl | www.lineairegeleiding.nl | www.lineairegeleidingshop.nl | www.linearmotion.nl

Six-row linear recirculating ball bearing and guideway assemblies

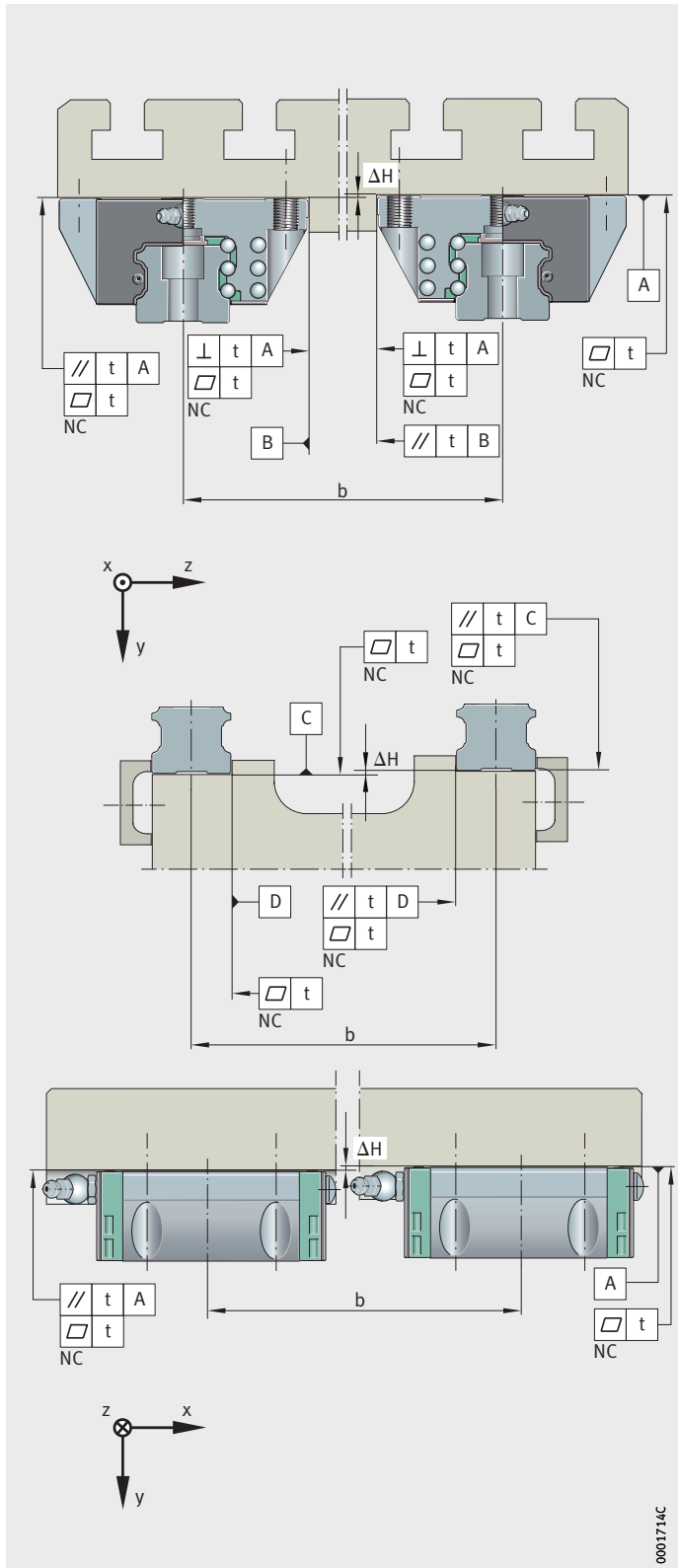

NC = not convex

b = spacing between guidance elements
ΔH = height difference
t = parallelism, flatness and perpendicularity tolerance

Figure 9
Tolerances of mounting surfaces and parallelism of mounted guideways and carriages

ALMOTION B.V. Nijverheidsweg 14 | 6662 NG Elst (Gld) | The Netherlands t +31(0)85 0491 777 e info@almotion.nl | www.almotion.nl | www.lineairegeleiding.nl | www.lineairegeleidingshop.nl | www.linearmotion.nl

Parallelism of mounted guideways

For guideways arranged in parallel, the values for t are in accordance with *Figure 9*, page 222, and the table. If the maximum values are used, this may increase the displacement resistance.

Values for geometry and position

Guideway	Preload class	
	V0, V1	V2
	Parallelism, flatness and perpendicularity t µm	
TKSD20 (-U, -ADB, -ADK)	9	6
TKSD25 (-U, -ADB, -ADK)	11	7
TKSD30 (-ADB, -ADK)	13	8
TKSD35 (-ADB, -ADK)	15	10
TKSD45 (-ADB, -ADK)	17	12

Locating heights and corner radii

For the design of the locating heights and corner radii, see table and *Figure 10*.

Locating heights, corner radii

Designation	Locating heights		Corner radii	
	h_1 mm	h_2 mm max.	r_1 mm max.	r_2 mm max.
KUSE20 (-L, -H, -HL)	5	4	1	0,5
KUSE25 (-L, -H, -HL)	5	4,5	1	0,8
KUSE30 (-L, -H, -HL)	6	5	1	0,8
KUSE35 (-L)	6,5	6	1	0,8
KUSE45 (-L)	9	8	1	1

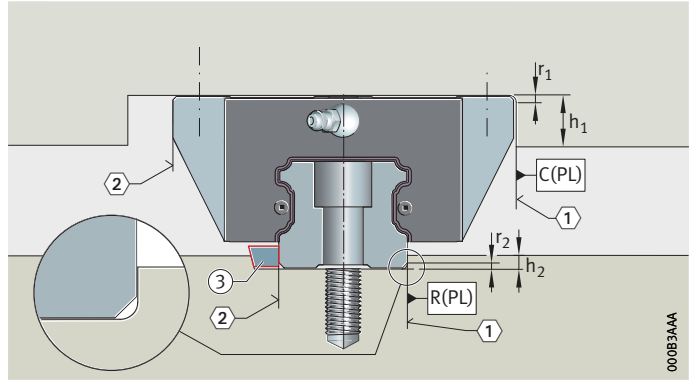

① Locating face
② Marking
③ Vee strip

Figure 10
Locating heights and corner radii

ALMOTION B.V. Nijverheidsweg 1 5962 Elst (Gld) | The Netherlands t +31(0)85 0491 777 e info@almotion.nl | www.almotion.nl | www.lineairegeleiding.nl | www.lineairegeleidingshop.nl | www.linearmotion.nl

Six-row linear recirculating ball bearing and guideway assemblies

Accuracy

Accuracy classes

Six-row linear recirculating ball bearing and guideway assemblies are available in accuracy classes G1 to G3, *Figure 11*. The standard is class G3.

Parallelism of raceways to locating surfaces

The parallelism tolerance of the guideways is dependent on the accuracy classes, *Figure 11*.

In systems with Corrotect coating, there may be deviations in tolerances compared with uncoated units.

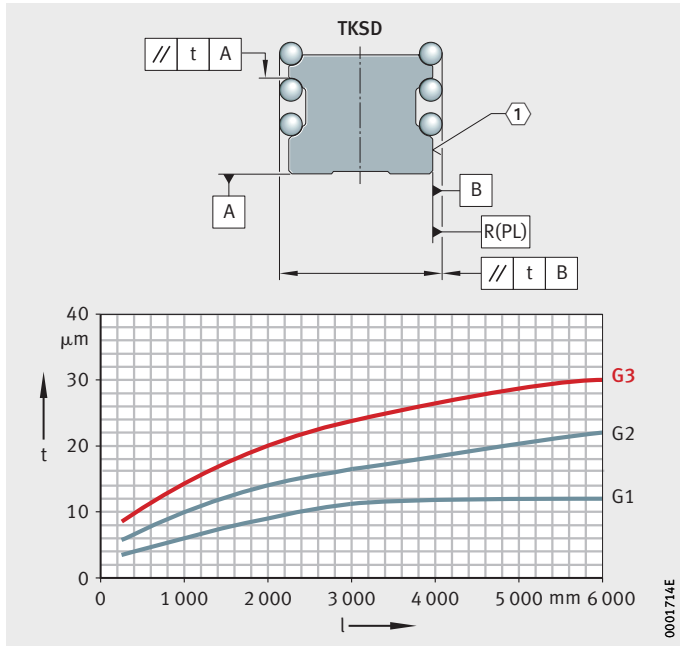

t = parallelism tolerance
l = total guideway length

1 Locating face

Figure 11
Accuracy classes and parallelism tolerances of guideways

Tolerances

The tolerances are arithmetic mean values, see table and *Figure 12*, page 225. They are relative to the centre point of the screw mounting or locating surfaces of the carriage.

The dimensions H and A_1 should always remain within the tolerance irrespective of the position of the carriage on the guideway, see table, page 225.

ALMOTION B.V. Nijverheidsweg 14 | 6662 NG Elst (Gld) | The Netherlands t +31(0)85 0491 777 e info@almotion.nl | www.almotion.nl | www.lineairegeleiding.nl | www.lineairegeleidingshop.nl | www.linearmotion.nl

Tolerances for height H and spacing A1

Tolerance		Accuracy		
		G1 µm	G2 µm	G3[1] µm
Tolerance for height	H	±10	±20	±25
Difference in height[2]	ΔH	5	10	15
Tolerance for spacing	A_1	±10	±15	±20
Difference in spacing[2]	ΔA_1	7	15	22

1) Standard accuracy class.

2) Difference between several carriages on one guideway, measured at the same point on the guideway.

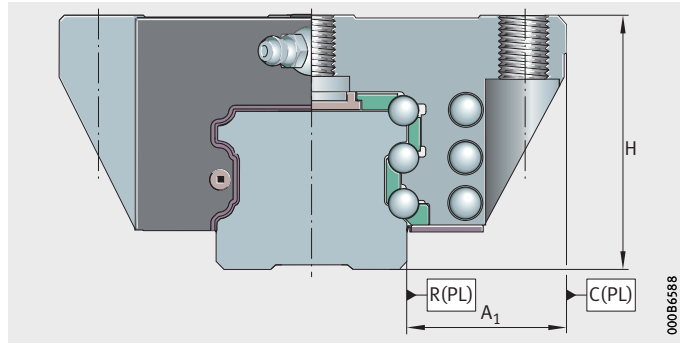

Figure 12
Datum dimensions for accuracy

Units with Corrotect coating

For these units, the values for the appropriate accuracy class must be increased by the values for the coating, see table.

Coated systems are only available in the accuracy class G3.

Tolerances for coated parts

Tolerance[1]		Corrotect RROC µm
Tolerance for height	H	+6
Difference in height[2]	ΔH	+3
Tolerance for spacing	A_1	+3
Difference in spacing[2]	ΔA_1	+3

1) Displacement in tolerance zone (guideway and carriage with coating).

2) Difference between several carriages on one guideway, measured at the same point on the guideway.

ALMOTION B.V. Nijverheidsweg 14 1662 LE Elst (Gld) | The Netherlands t +31(0)85 0491 777 e info@almotion.nl | www.almotion.nl | www.lineairegeleiding.nl | www.lineairegeleidingshop.nl | www.linearmotion.nl

Six-row linear recirculating ball bearing and guideway assemblies

Height sorting 2S

If there are particular requirements for the accuracy of parallel systems, it is possible to restrict the height tolerance by specific sorting.

The height difference ΔH_{2S} is measured at the centre of the guideway (l/2). At this point, the height difference between all carriages of linear recirculating ball bearing and guideway assemblies supplied as a set is max. ΔH_{2S}, *Figure 13* and table.

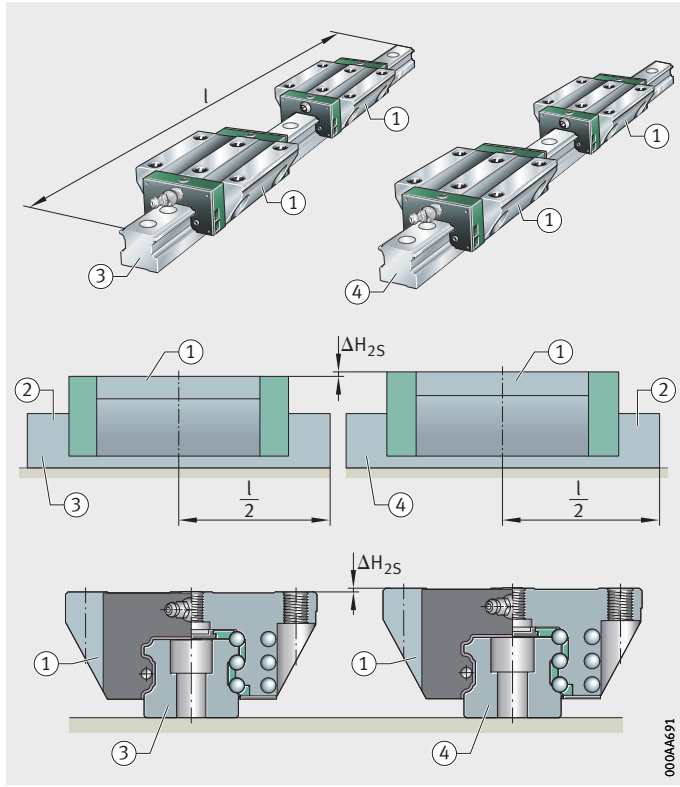

l = guideway length

① Any carriage
② Guideway
③ Linear recirculating ball bearing and guideway assembly 1
④ Linear recirculating ball bearing and guideway assembly 2

Figure 13
Height sorting 2S

Height difference in 2S

Height difference	Accuracy		
	G1	G2	G3
	µm	µm	µm
ΔH_{2S} [1)]	10	20	25

1) Measured at the centre of the guideway.

ALMOTION B.V. Nijverheidsweg 14 | 6662 NG Elst (Gld) | The Netherlands t +31(0)85 0491 777 e info@almotion.nl | www.almotion.nl | www.lineairegeleiding.nl | www.lineairegeleidingshop.nl | www.linearmotion.nl

Positional and length tolerances of guideways

The positional tolerances are not dependent on the guideway length, *Figure 14* and tables.

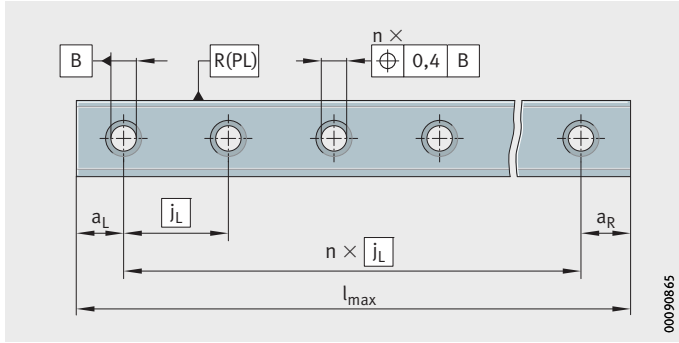

Figure 14
Positional and length tolerances of guideways

Length tolerances of guideways

Length tolerance			
Dependent on guideway length l mm			Multi-piece guideways mm
≦ 1000	1000 – 3000	> 3000	
–1	–1,5	±0,1% of guideway length	±3 over total length

If the ordering designation does not specify delivery of the guideway as a single piece, the guideway can optionally be supplied as several segments. Permissible pitch, see table.

Segments for multi-piece guideways

Guideway length[1)] mm	Maximum permissible number of segments
< 3 000	2
3 000– 4 000	3
4 000– 6 000	4
> 6 000	4 plus 1 segment of 1 500 mm above 6 000 mm guideway length

1) Minimum length of one segment = 600 mm.

ALMOTION B.V. Nijverheidsweg 1 5962 Elst (Gld) | The Netherlands t +31(0)85 0491 777 e info@almotion.nl | www.almotion.nl | www.lineairegeleiding.nl | www.lineairegeleidingshop.nl | www.linearmotion.nl

Six-row linear recirculating ball bearing and guideway assemblies

Ordering example, ordering designation

Carriage and guideway separate, guideway with symmetrical hole pattern:

Carriages	Two carriages for six-row linear recirculating ball bearing and guideway assembly	KWSE
	Size	35
	Carriage preload	V2
	Accuracy class	G3
Ordering designation	2×**KWSE35-V2-G3**, *Figure 15*	
Guideway	Guideway for carriage	TKSD
	Size	35
	Accuracy class	G3
	Length of guideway	1510 mm
	a_L	35 mm
	a_R	35 mm
Ordering designation	1×**TKSD35-G3/1510-35/35**, *Figure 15*	

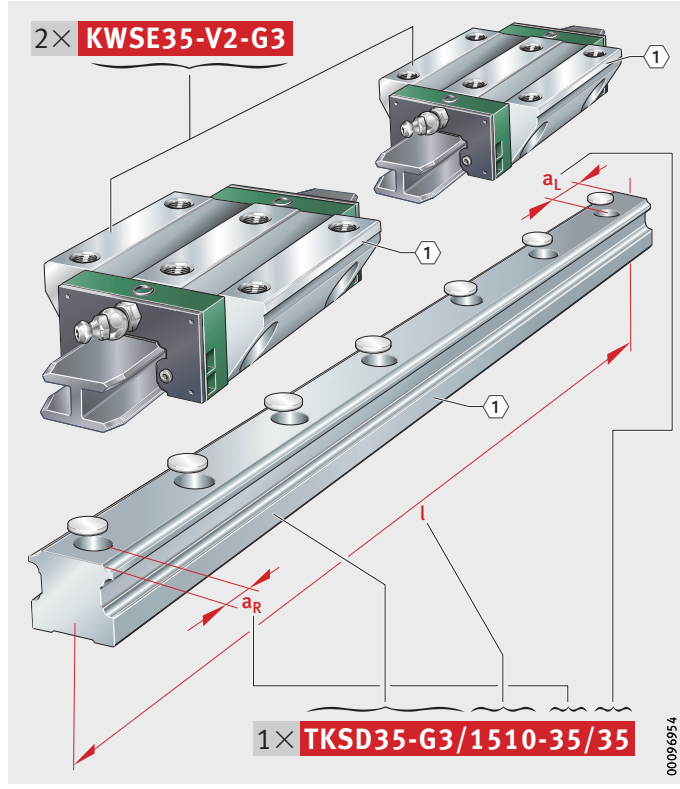

① Locating face

Figure 15
Ordering example, ordering designation

ALMOTION B.V. Nijverheidsweg 14 | 6662 NG Elst (Gld) | The Netherlands t +31(0)85 0491 777 e info@almotion.nl | www.almotion.nl | www.linearregeleiding.nl | www.linearregeleidingshop.nl | www.linearmotion.nl

Unit, guideway with asymmetrical hole pattern:

Unit	Linear recirculating ball bearing and guideway assembly	
	with two carriages per guideway	KUSE
	Size	30
	Carriage type	H
	Number of carriages per unit	W2
	Preload class	V2
	Accuracy class	G3
	Length of guideway	1 540 mm
	a_L	30 mm
	a_R	70 mm

Ordering designation: 1×**KUSE30-H-W2-V2-G3/1540-30/70**, *Figure 16*

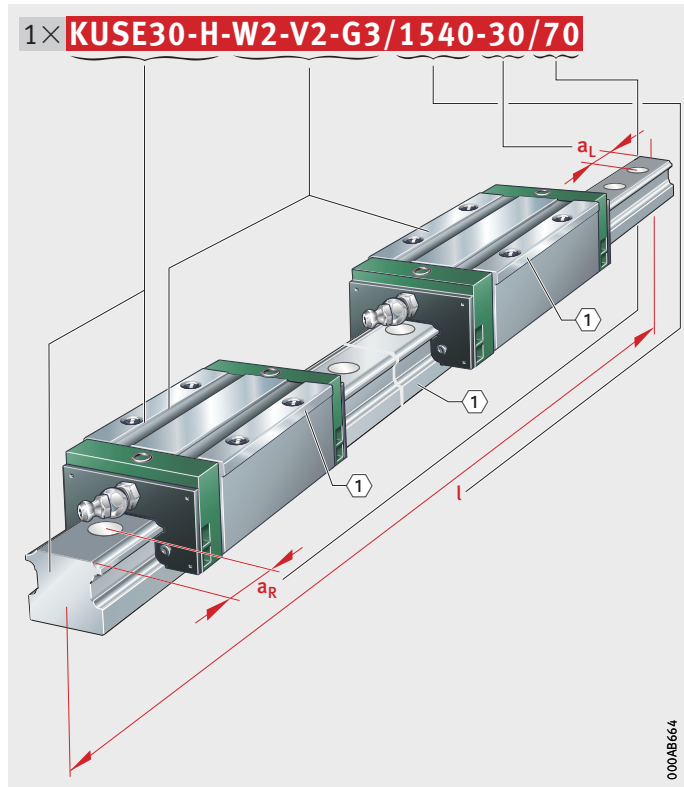

① Locating face

Figure 16
Ordering example, ordering designation

ALMOTION B.V. Nijverheidsweg 1 | 5462 Elst (Gld) | The Netherlands t +31(0)85 0491 777 e info@almotion.nl | www.almotion.nl | www.lineairegeleiding.nl | www.lineairegeleidingshop.nl | www.linearmotion.nl

Six-row linear recirculating ball bearing and guideway assemblies

Standard and L carriages

X-life

Dimension table · Dimensions in mm

Designation	Dimensions				Mounting dimensions									
	l_{max} [2]	H	B	L [3]	A_1	J_B	b $^{-0,005}_{-0,03}$	A_2	L_1	J_L	J_{LZ}	j_L	a_L, a_R [4]	
													min.	max.
KUSE20	3 900	30	63	71,4	21,5	53	20	5	52,4	40	35	60	20	53
KUSE20-L				91,9					72,9					
KUSE25	5 880	36	70	81,8	23,5	57	23	6,5	60,9	45	40	60	20	53
KUSE25-L				104,3					83,4					
KUSE30	5 860	42	90	91,6	31	72	28	9	67,6	52	44	80	20	71
KUSE30-L				119,3					95,3					
KUSE35	5 860	48	100	107,2	33	82	34	9	78,3	62	52	80	20	71
KUSE35-L				138,9					109,9					
KUSE45	5 835	60	120	138,7	37,5	100	45	10	103,1	80	60	105	20	94
KUSE45-L				174,3					138,7					

For further table values, see page 232 and page 233.

① Locating face. ② Marking.

1) The stated torques represent maximum values for the secure transmission of forces in vibration-free, quasistatic applications ($S_0 = 1$). We recommend that the tightening torques for the screw connection of the adjacent construction should be determined at the customer under the conditions specific to the application and operation, observing the information in VDI Guideline 2230 Part 1 (2015) and the information in this description, see page 69 and page 26.

2) Maximum length of single-piece guideways.
Permissible number of guideway segments, see page 227.

3) Minimum covered length for sealing the upper lubrication connectors N_2.

4) a_L and a_R are dependent on the guideway length.

5) For location from above:
the maximum screw depth for two central threaded holes is T_6 + 3 mm.

ALMOTION B.V. Nijverheidsweg 14 | 8862 NG Elst (Gld) | The Netherlands t +31(0)85 0491 777 e info@almotion.nl | www.almotion.nl | www.lineairegeleiding.nl | www.lineairegeleidingshop.nl | www.linearmotion.nl

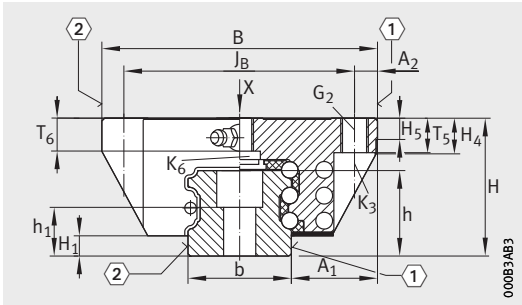

KUSE, KUSE..-L

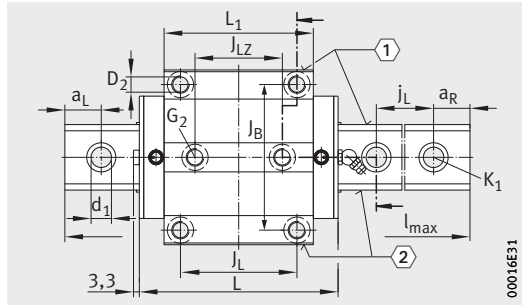

KUSE, KUSE..-L
View X rotated 90°

							Fixing screws[1]									
H_1	H_5	H_4	T_5	T_6[5]	h	h_1	G_2		K_1		K_3		K_6		d_1	D_2
							DIN ISO 4762-12.9						DIN 7984-8.8			
								M_A Nm		M_A Nm		M_A Nm		M_A Nm		
4,6	5	10,6	10	7,2	18	9,8	M6	10	M5	10	M5	10	M5	5,8	5,8	5,5
5,2	5	9,8	10	9,5	21,7	12,4	M8	24	M6	17	M6	17	M6	10	6,8	6,7
5,4	6	13,2	12	10	25	13,5	M10	41	M8	41	M8	41	M8	24	9	8,6
6,6	6,5	13,3	13	12	29,7	18,2	M10	41	M8	41	M8	41	M8	24	9	8,6
8,6	9	17,7	15	15	37,2	21,7	M12	83	M12	140	M10	83	M10	48	13,4	10,6

ALMOTION B.V. Nijverheidsweg 14 6662 NE Elst (Gld) | The Netherlands t +31(0)85 0491 777 e info@almotion.nl | www.almotion.nl | www.lineairegeleiding.nl | www.lineairegeleidingshop.nl | www.linearmotion.nl

Six-row linear recirculating ball bearing and guideway assemblies

Standard and L carriages

X-life

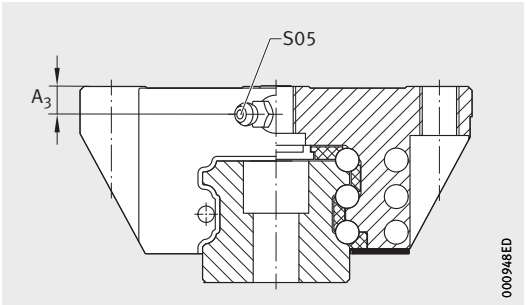

Lubrication connector on end face

Dimension table (continued) · Dimensions in mm

Designation	Carriage		Guideway		Lubrication connectors			
	Designation	Mass m ≈ kg	Designation	Mass m ≈ kg/m	N_2 [2] max.	J_{L5} [3]	A_3 [4]	O DIN 3771
KUSE20	KWSE20	0,43	TKSD20	2,3	3	9,95	5,8	3×1,5
KUSE20-L	KWSE20-L	0,6				20,19		
KUSE25	KWSE25	0,6	TKSD25	3,1	3	12,94	6	3×1,5
KUSE25-L	KWSE25-L	0,82				24,19		
KUSE30	KWSE30	1,2	TKSD30	4,4	4,5	12,80	6,5	4,5×1,5
KUSE30-L	KWSE30-L	1,6				26,65		
KUSE35	KWSE35	1,5	TKSD35	6,5	4,5	11,93	7,2	4,5×1,5
KUSE35-L	KWSE35-L	2,1				27,75		
KUSE45	KWSE45	3,15	TKSD45	11,3	6	15,65	8,5	7×1,5
KUSE45-L	KWSE45-L	4,2				33,45		

1) The basic load rating can only be transmitted fully if the whole thread length is used and the adjacent construction is dimensioned appropriately.

2) Maximum diameter of lubrication hole in adjacent construction.

3) Position of lubrication hole in adjacent construction.

4) Maximum screw depth in end piece 7 mm.

ALMOTION B.V. Nijverheidsweg 14 | 6662 NG Elst (Gld) | The Netherlands t +31(0)85 0491 777 e info@almotion.nl | www.almotion.nl | www.lineairegeleiding.nl | www.lineairegeleidingshop.nl | www.linearmotion.nl

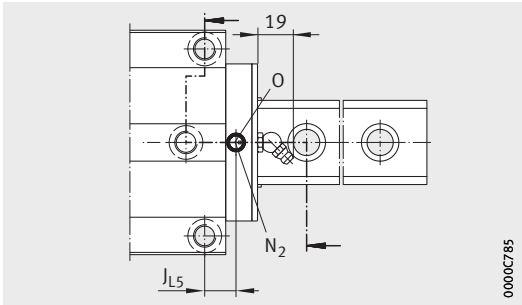

Lubrication connector on top face

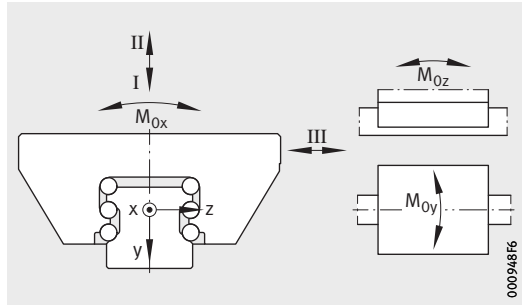

Load directions

Basic load ratings[1]						Moment ratings		
Load direction I Compressive load		Load direction II Tensile load		Load direction III Lateral load				
dyn. C N	stat. C_0 N	dyn. C N	stat. C_0 N	dyn. C N	stat. C_0 N	M_{0x} Nm	M_{0y} Nm	M_{0z} Nm
25 500	61 000	21 300	35 300	21 000	35 000	530	350	305
35 000	83 000	25 000	47 000	26 000	48 000	730	640	570
38 000	81 000	26 000	45 000	28 000	47 000	840	510	450
47 000	112 000	33 000	62 000	35 000	65 000	1 160	930	830
54 000	108 000	37 800	60 000	40 000	62 000	1 350	800	710
68 000	152 000	48 000	85 000	50 000	88 000	1 920	1 540	1 360
76 100	150 000	53 300	82 400	56 600	89 150	2 300	1 300	1 140
96 000	214 000	67 500	119 000	71 000	125 000	3 300	2 480	2 190
103 000	212 000	72 300	117 400	76 900	121 800	4 500	2 280	2 050
128 000	291 500	89 000	159 000	93 400	168 000	6 200	4 050	3 650

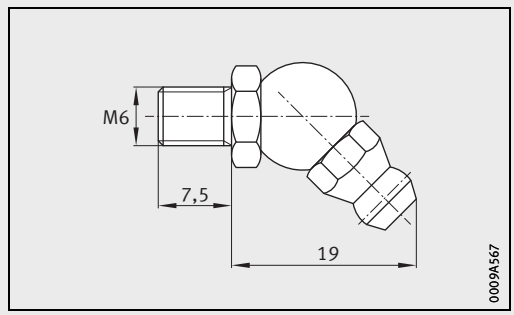

Lubrication connector S05

ALMOTION B.V. Nijverheidsweg 1 5962 Elst (Gld) | The Netherlands t +31(0)85 0491 777 e info@almotion.nl | www.almotion.nl | www.lineairegeleiding.nl | www.lineairegeleidingshop.nl | www.linearmotion.nl

ALMOTION

Six-row linear recirculating ball bearing and guideway assemblies

H and HL carriages

X-life

Dimension table · Dimensions in mm

Designation	Dimensions				Mounting dimensions						
	l_{max} [2]	H	B	L [3]	A_1	J_B	b $^{-0,005}_{-0,03}$	A_2	L_1	J_L	j_L
KUSE20-H	3 900	30	44	71,4	12	32	20	6	52,4	36	60
KUSE20-HL				91,9					72,9	50	
KUSE25-H	5 880	40	48	81,8	12,5	35	23	6,5	60,9	35	60
KUSE25-HL				104,3					83,4	50	
KUSE30-H	5 860	45	60	91,6	16	40	28	10	67,6	40	80
KUSE30-HL				119,3					95,3	60	

For further table values, see page 236 and page 237.

① Locating face. ② Marking.

1) The stated torques represent maximum values for the secure transmission of forces in vibration-free, quasistatic applications ($S_0 = 1$). We recommend that the tightening torques for the screw connection of the adjacent construction should be determined at the customer under the conditions specific to the application and operation, observing the information in VDI Guideline 2230 Part 1 (2015) and the information in this description, see page 69 and page 26.

2) Maximum length of single-piece guideways.
Permissible number of guideway segments, see page 219.

3) Minimum covered length for sealing the upper lubrication connectors N_2.

4) a_L and a_R are dependent on the guideway length.

ALMOTION B.V. Nijverheidsweg 14 | 6662 NG Elst (Gld) | The Netherlands t +31(0)85 0491 777 e info@almotion.nl | www.almotion.nl | www.lineairegeleiding.nl | www.lineairegeleidingshop.nl | www.linearmotion.nl

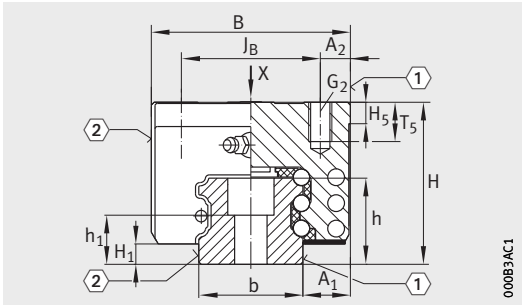

KUSE..-H, KUSE..-HL

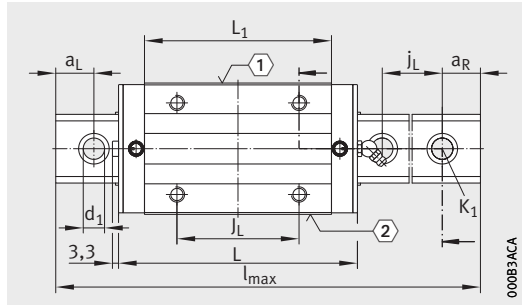

KUSE..-H, KUSE..-HL
View X rotated 90°

							Fixing screws[1]				
a_L, a_R[4]		H_1	H_5	T_5	h	h_1	G_2		K_1		d_1
							DIN ISO 4762-12.9				
								M_A		M_A	
min.	max.							Nm		Nm	
20	53	4,6	5	6	18	9,8	M5	10	M5	10	5,8
20	53	5,2	5	10	21,7	12,4	M6	17	M6	17	6,8
20	71	5,4	6	11	25	13,5	M8	41	M8	41	9

ALMOTION B.V. Nijverheidsweg 1 5962 Elst (Gld) | The Netherlands t +31(0)85 0491 777 e info@almotion.nl | www.almotion.nl | www.lineairegeleiding.nl | www.lineairegeleidingshop.nl | www.linearmotion.nl

Six-row linear recirculating ball bearing and guideway assemblies

H and HL carriages

X-life

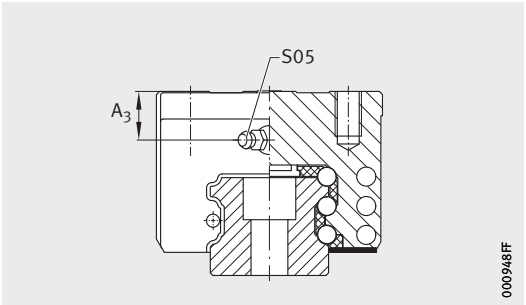

Lubrication connector on end face

Dimension table (continued) · Dimensions in mm

Designation	Carriage		Guideway		Lubrication connectors			
	Designation	Mass m ≈ kg	Designation	Mass m ≈ kg/m	N_2 [2] max.	J_{L5} [3]	A_3 [4]	O DIN 3771
KUSE20-H	KWSE20-H	0,32	TKSD20	2,3	3	11,95	5,8	3×1,5
KUSE20-HL	KWSE20-HL	0,44				15,19		
KUSE25-H	KWSE25-H	0,5	TKSD25	3,1	3	17,94	10	3×1,5
KUSE25-HL	KWSE25-HL	0,7				21,69		
KUSE30-H	KWSE30-H	0,9	TKSD30	4,4	4,5	18,80	9,5	4,5×1,5
KUSE30-HL	KWSE30-HL	1,2				22,65		

1) The basic load rating can only be transmitted fully if the whole thread length is used and the adjacent construction is dimensioned appropriately.

2) Maximum diameter of lubrication hole in adjacent construction.

3) Position of lubrication hole in adjacent construction.

4) Maximum screw depth in end piece 7 mm.

ALMOTION B.V. Nijverheidsweg 14 | 6662 NG Elst (Gld) | The Netherlands t +31(0)85 0491 777 e info@almotion.nl | www.almotion.nl | www.lineairegeleiding.nl | www.lineairegeleidingshop.nl | www.linearmotion.nl

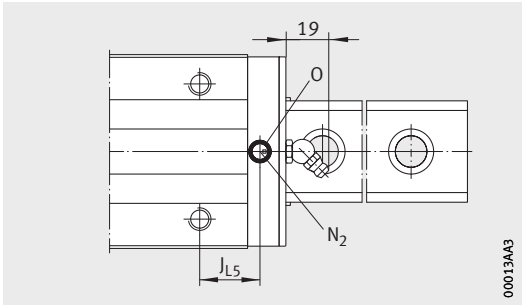

Lubrication connector on top face

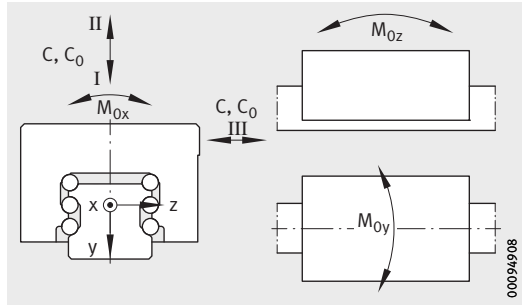

Load directions

Basic load ratings[1)]						Moment ratings		
Load direction I Compressive load		Load direction II Tensile load		Load direction III Lateral load				
dyn. C N	stat. C_0 N	dyn. C N	stat. C_0 N	dyn. C N	stat. C_0 N	M_{0x} Nm	M_{0y} Nm	M_{0z} Nm
25 500	61 000	21 300	35 300	21 000	35 000	530	350	305
35 000	83 000	25 000	47 000	26 000	48 000	730	640	570
38 000	81 000	26 000	45 000	28 000	47 000	840	510	450
47 000	112 000	33 000	62 000	35 000	65 000	1 160	930	830
54 000	108 000	37 800	60 000	40 000	62 000	1 350	800	710
68 000	152 000	48 000	85 000	50 000	88 000	1 920	1 540	1 360

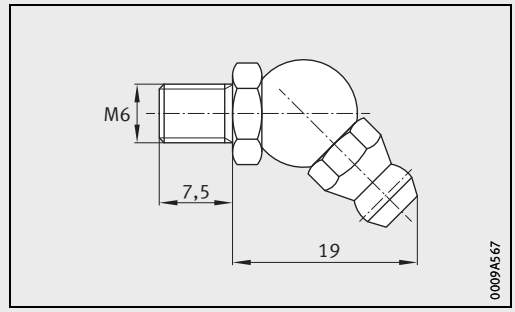

Lubrication connector S05

ALMOTION B.V. Nijverheidsweg 1 | 5962 Elst (Gld) | The Netherlands t +31(0)85 0491 777 e info@almotion.nl | www.almotion.nl | www.lineairegeleiding.nl | www.lineairegeleidingshop.nl | www.linearmotion.nl

Six-row linear recirculating ball bearing and guideway assemblies

Guideways and closing methods

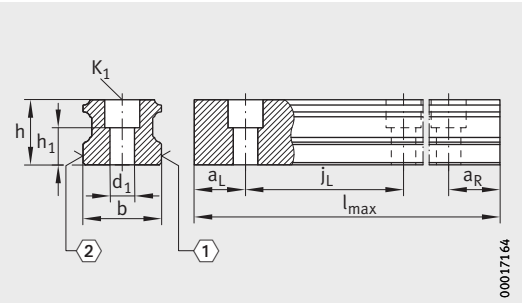

TKSD

Dimension table · Dimensions in mm

Designation	For linear guidance system	Mass m ≈ kg/m	Closing plug[1]		Covering strip[2]		
			Plastic[4] one-piece	Brass one-piece	Adhesive bonded	Clip fit	Retaining plate
TKSD20	KUSE20	2,3	KA10-TN	KA10-M	–	–	–
TKSD20-U			–	–			
TKSD20-ADB			–	–	ADB13	–	HPL.ADB9-B
TKSD20-ADK					–	ADK12	
TKSD25	KUSE25	3,1	KA11-TN	KA11-M	–	–	–
TKSD25-U			–	–			
TKSD25-ADB			–	–	ADB13	–	HPL.ADB9-B
TKSD25-ADK					–	ADK12	
TKSD30	KUSE30	4,4	KA15-TN	KA15-M	–	–	–
TKSD30-ADB			–	–	ADB18	–	HPL.ADB17-B
TKSD30-ADK					–	ADK16	
TKSD35	KUSE35	6,5	KA15-TN	KA15-M	–	–	–
TKSD35-ADB			–	–	ADB18	–	HPL.ADB17-B
TKSD35-ADK					–	ADK16	
TKSD45	KUSE45	11,3	KA20-TN	KA20-M	–	–	–
TKSD45-ADB			–	–	ADB23	–	HPL.ADB17-B
TKSD45-ADK					–	ADK21	

〈1〉 Locating face. 〈2〉 Marking.

1) Closing plugs, see page 261.

2) Covering strips, see page 262.

3) The stated torques represent maximum values for the secure transmission of forces in vibration-free, quasistatic applications ($S_0 = 1$). We recommend that the tightening torques for the screw connection of the adjacent construction should be determined at the customer under the conditions specific to the application and operation, observing the information in VDI Guideline 2230 Part 1 (2015) and the information in this description, see page 69 and page 26.

4) Standard.

5) Maximum length of single-piece guideways. Permissible number of guideway segments, see page 227.

6) a_L and a_R are dependent on the guideway length.

ALMOTION B.V. Nijverheidsweg 14 | 8862 NG Elst (Gld) | The Netherlands t +31(0)85 0491 777 e info@almotion.nl | www.almotion.nl | www.lineairegeleiding.nl | www.lineairegeleidingshop.nl | www.linearmotion.nl

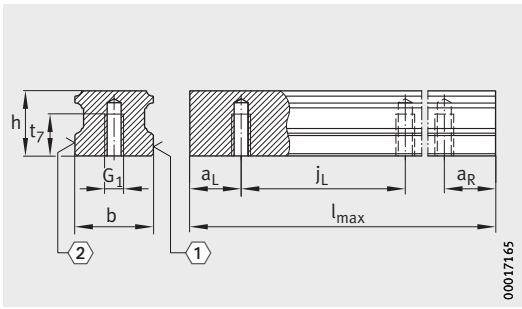

TKSD..-U

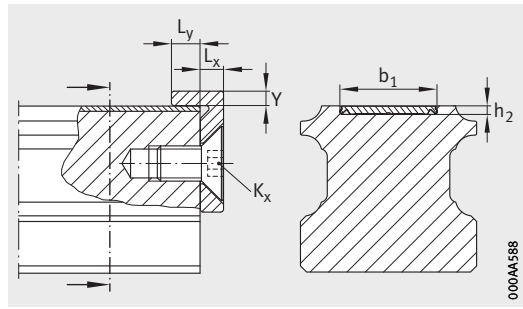

Retaining plate and covering strip

Dimensions														Fixing screws[3]				
K_x	L_x	L_y	Y	l_{max}[5]	h	b	a_L, a_R[6]		j_L	h_1	h_2	t_7	b_1	G_1		K_1		d_1
														DIN ISO 4762-12.9				
						−0,005 −0,035	min.	max.							M_A Nm		M_A Nm	
–	–	–	–	3 900	18	20	20	53	60	9,8	–	–	–	–	–	M5	10	5,8
												10		M6	17	–	–	–
M5	4	5	2								0,5	–	13	–	–	M5	10	5,8
											1,1		12,6					
–	–	–	–	5 880	21,7	23	20	53	60	12,4	–	–	–	–	–	M6	17	6,8
												12		M6	17	–	–	–
M5	4	5	2								0,5	–	13	–	–	M6	17	6,8
											1,1		12,6					
–	–	–	–	5 860	25	28	20	71	80	13,5	–	–	–	–	–	M8	41	9
M6	4	5	2,5								0,5		18					
											1,1		16,6					
–	–	–	–	5 860	29,7	34	20	71	80	18,2	–	–	–	–	–	M8	41	9
M6	4	5	2,5								0,5		18					
											1,1		16,6					
–	–	–	–	5 835	37,2	45	20	94	105	21,7	–	–	–	–	–	M12	140	13,4
M6	4	5	2,5								0,5		23					
											1,1		21,7					

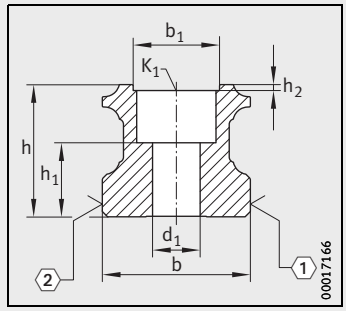

TKSD..-ADB

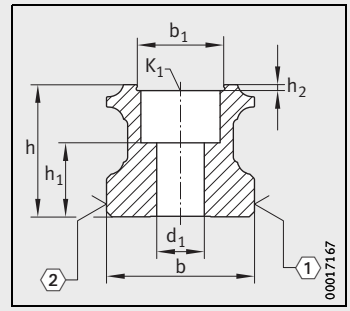

TKSD..-ADK

ALMOTION B.V. Nijverheidsweg 14 1662 Hb Elst (Gld) | The Netherlands t +31(0)85 0491 777 e info@almotion.nl | www.almotion.nl | www.lineairegeleiding.nl | www.lineairegeleidingshop.nl | www.linearmotion.nl