Linear recirculating roller bearing and guideway assemblies

Guideways and closing methods

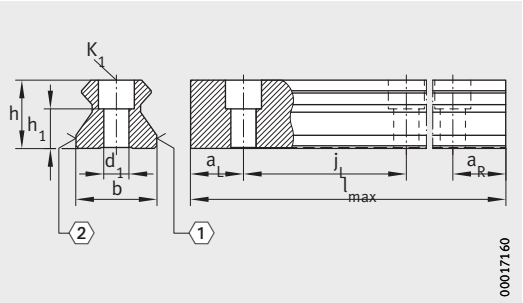

TSX..-E

Dimension table (continued) · Dimensions in mm

Designation	For linear guidance system	Mass m ≈ kg/m	Closing plug[1]						Covering strip[2]	
			Plastic[4]		Brass			Steel		
			one-piece	two-piece	one-piece	two-piece	conical	two-piece	Adhesive bonded	Clip fit
TSX55-E	RUE55-E	13,1	KA24-TN	KA24-TN/A	KA24-M	KA24-M/A	KA24-M-konisch	–	–	–
TSX55-E-KA+ST			–	–	–	–	–	KA25-ST/A		
TSX55-E-U										
TSX55-E-ADB								–	ADB27	
TSX55-E-ADK									–	ADK25
TSX65-E	RUE65-E	19,5	KA26-TN	–	KA26-M	–	KA26-M-konisch	–	–	–
TSX65-E-KA+ST			–		–		–	KA27-ST/A		
TSX65-E-U										
TSX65-E-ADB								–	ADB29	
TSX65-E-ADK									–	ADK27
TSX100-E	RUE100-E-L	45,3	–	–	KA40-M	–	–	–	–	–

① Locating face. ② Marking.

1) Closing plugs, see page 180.

2) Covering strips, see page 183.

3) The stated torques represent maximum values for the secure transmission of forces in vibration-free, quasistatic applications ($S_0 = 1$). We recommend that the tightening torques for the screw connection of the adjacent construction should be determined at the customer under the conditions specific to the application and operation, observing the information in VDI Guideline 2230 Part 1 (2015) and the information in this description, see page 69 and page 26.

4) Standard.

5) Maximum length of single-piece guideways.
Permissible number of guideway segments, see page 117.

6) a_L and a_R are dependent on the guideway length.

ALMOTION B.V. Nijverheidsweg 14 | 6662 NG Elst (Gld) | The Netherlands t +31(0)85 0491 777 e info@almotion.nl | www.almotion.nl | www.lineairegeleiding.nl | www.lineairegeleidingshop.nl | www.linearmotion.nl

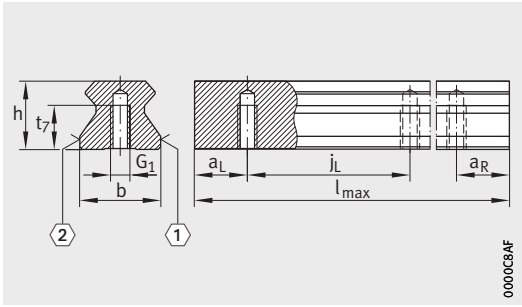

TSX..-E-U

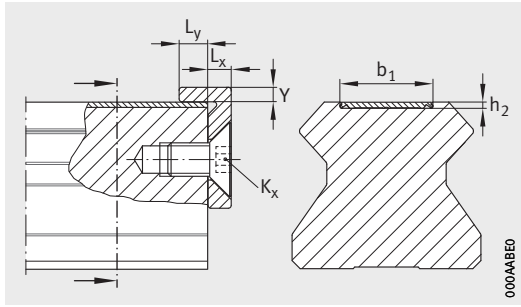

Retaining plate and covering strip

Retaining plate	Dimensions				Dimensions										Fixing screws[3]				
	K_x	L_x	L_y	Y	l_{max}[5]	h	b	a_L, a_R [6]		j_L	h_1	h_2	t_7	b_1	G_1		K_1		d_1
															DIN ISO 4762-12.9				
							−0,005 −0,035	min.	max.		±0,5					M_A Nm		M_A Nm	
–	–	–	–	–	5 880	45	53	20	47	60	22,5	–	–	–	–	–	M14	220	15,4
													22		M14	220	–	–	–
HPL.ADB17-B	M6	4	5	2,5								0,5	–	27	–	–	M14	220	15,4
												1,1		25,7					
–	–	–	–	–	5 865	53,8	63	20	61	75	28,8	–	–	–	–	–	M16	340	18
													25		M16	340	–	–	–
HPL.ADB17-B	M6	4	5	2,5								0,5	–	29	–	–	M16	340	18
												1,1		27,7					
–	–	–	–	–	2 730	80	100	30	83	105	48	–	–	–	–	–	M24	1 100	26

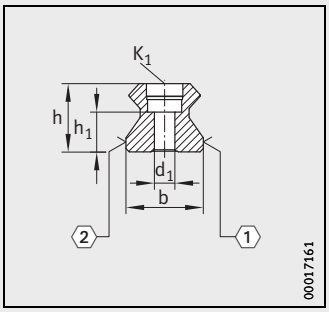

TSX..-E-KA+ST

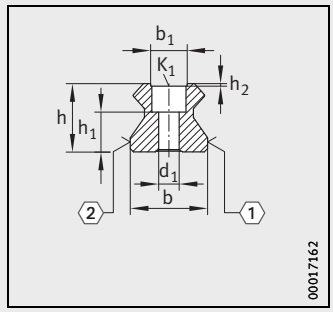

TSX..-E-ADB

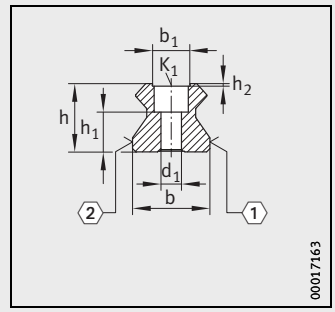

TSX..-E-ADK

ALMOTION EU | Nijverheidsweg 14 | 6662 NG Elst (Gld) | The Netherlands t +31(0)85 0491 777 e info@almotion.nl | www.almotion.nl | www.lineairegeleiding.nl | www.lineairegeleidingshop.nl | www.linearmotion.nl

Four-row linear recirculating ball bearing and guideway assemblies

Ordering example, ordering designation

Unit, guideway with asymmetrical hole pattern:

Unit	Linear recirculating ball bearing and guideway assembly	
	with two carriages per guideway	KUVE
	Size	25
	Carriage type, full complement	B
	Number of carriages per unit	W2
	Preload class	V2
	Accuracy class	G3
	With Corrotect coating	RROC
	Length of guideway	1 510 mm
	a_L	20 mm
	a_R	50 mm
Ordering designation	1×**KUVE25-B-W2-V2-G3-RROC/1510-20/50**, *Figure 28*	

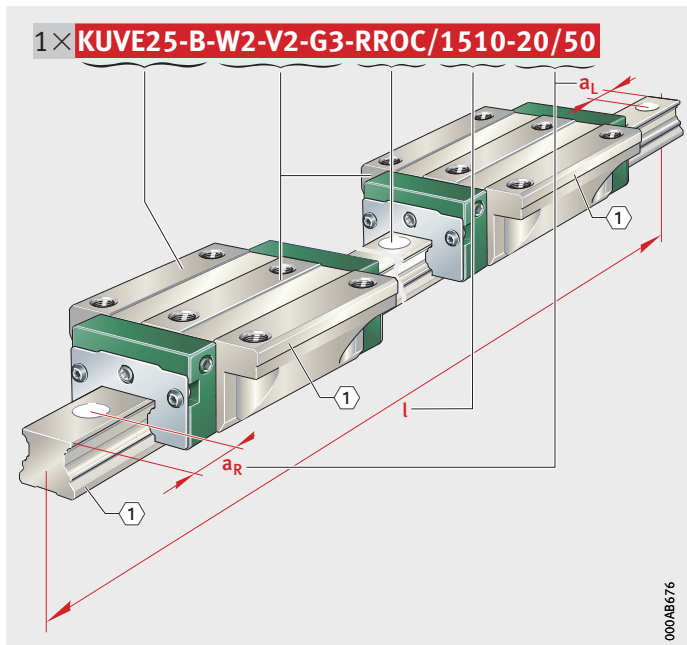

① Locating face

Figure 28
Ordering example, ordering designation

ALMOTION B.V. Nijverheidsweg 14 | 6662 NG Elst (Gld) | The Netherlands t +31(0)85 0491 777 e info@almotion.nl | www.almotion.nl | www.lineairegeleiding.nl | www.lineairegeleidingshop.nl | www.linearmotion.nl

Carriage and guideway separate, guideway with symmetrical hole pattern:

Carriages	Carriage for four-row linear ball bearing and guideway assembly	KWVE
	Size	25
	Carriage type, full complement	B
	Long carriage	L
	Preload class	V2
	Accuracy class	G3
Ordering designation	2×**KWVE25-B-L-V2-G3**, *Figure 29*	
Guideway	Guideway for carriage	TKVD
	Size	25
	Accuracy class	G3
	Length of guideway	1 570 mm
	a_L	35 mm
	a_R	35 mm
Ordering designation	1×**TKVD25-G3/1570-35/35**, *Figure 29*	

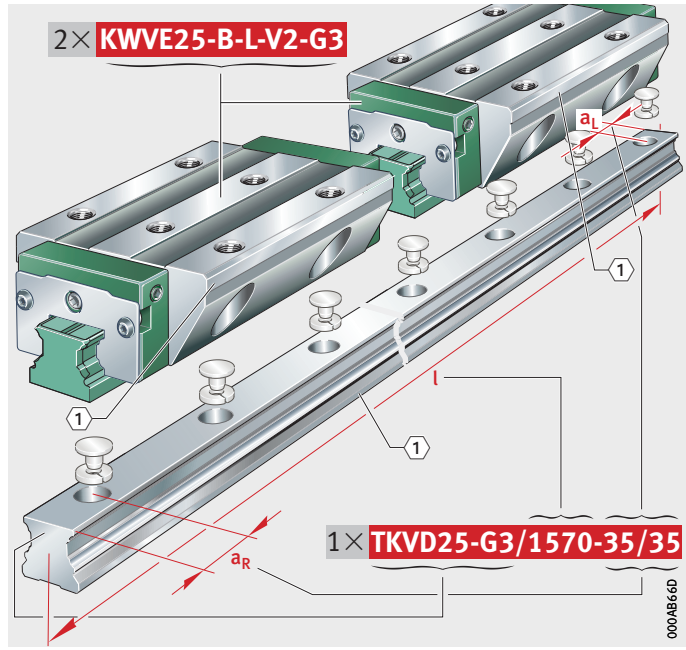

1 Locating face

Figure 29
Ordering example, ordering designation

ALMOTION B.V. Nijverheidsweg 14 | 6662 NG Elst (Gld) | The Netherlands | +31(0)85 0491 777 e info@almotion.nl | www.almotion.nl | www.lineairegeleiding.nl | www.lineairegeleidingshop.nl | www.linearmotion.nl

Four-row linear recirculating ball bearing and guideway assemblies

Full complement
Standard, L, N and NL carriages

Dimension table · Dimensions in mm

Designation	Dimensions				Mounting dimensions										
	l_{max} [2]	H	B	L	A_1	J_B	b $^{-0,005}_{-0,03}$	A_2	L_1	L_s	J_L	J_{LZ}	j_L	a_L, a_R [3] min.	a_L, a_R [3] max.
KUVE15-B	2 880	24	47	61,2	16	38	15	4,5	39,8	1,3	30	26	60	20	53
KUVE20-B	5 880	30	63	71,4	21,5	53	20	5	50,4	1,3	40	35	60	20	53
KUVE20-B-L				88,9					67,9						
KUVE20-B-N		27		71,4					50,4						
KUVE20-B-NL				88,9					67,9						
KUVE25-B	5 880	36	70	83,3	23,5	57	23	6,5	60,7	1,65	45	40	60	20	53
KUVE25-B-L				109,1					86,5						
KUVE25-B-N		31		83,3					60,7						
KUVE25-B-NL				109,1					86,5						
KUVE30-B	5 860	42	90	99	31	72	28	9	72	1,65	52	44	80	20	71
KUVE30-B-L				127					100						
KUVE30-B-N		38		99					72						
KUVE30-B-NL				127					100						
KUVE35-B	5 860	48	100	112	33	82	34	9	80	1,65	62	52	80	20	71
KUVE35-B-L				145					113						
KUVE35-B-N		44		112					80						
KUVE35-B-NL				145					113						
KUVE45-B	5 835	60	120	140,6	37,5	100	45	10	102,5	2,2	80	60	105	20	94
KUVE45-B-L				172,7					134,6						
KUVE45-B-N		52		140,6					102,5						
KUVE45-B-NL				172,7					134,6						
KUVE55-B	5 820	70	140	173,6	43,5	116	53	12	132	2,2	95	70	120	20	107
KUVE55-B-L				211,6					170						

For further table values, see page 314 and page 315.

① Locating face. ② Marking.

1) The stated torques represent maximum values for the secure transmission of forces in vibration-free, quasistatic applications ($S_0 = 1$). We recommend that the tightening torques for the screw connection of the adjacent construction should be determined at the customer under the conditions specific to the application and operation, observing the information in VDI Guideline 2230 Part 1 (2015) and the information in this description, see page 69 and page 26.

2) Maximum length of single-piece guideways.
Permissible number of guideway segments, see page 309.

3) a_L and a_R are dependent on the guideway length.

ALMOTION B.V. Nijverheidsweg 14 | 6662 NG Elst (Gld) | The Netherlands t +31(0)85 0491 777 e info@almotion.nl | www.almotion.nl | www.linearregeleiding.nl | www.linearregeleidingshop.nl | www.linearmotion.nl

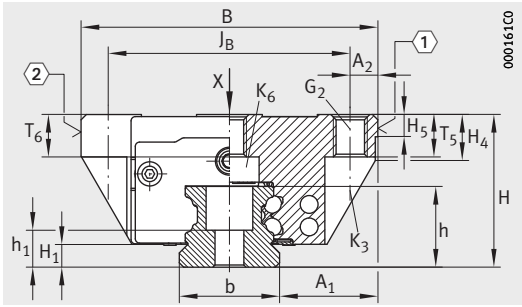

KUVE..-B, KUVE..-B-L, KUVE..-B-N, KUVE..B-NL

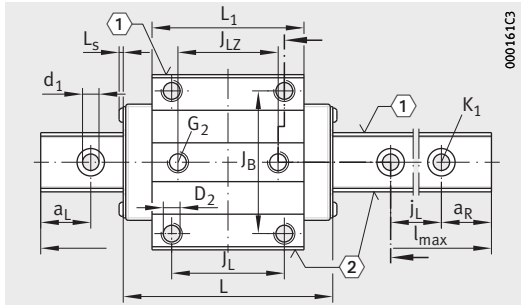

KUVE..-B, KUVE..-B-L, KUVE..-B-N, KUVE..-B-NL
View X rotated 90°

							Fixing screws[1)]											
H_1	H_4	H_5	T_5	T_6	h	h_1	G_2		K_1		K_3		K_6		K_6		d_1	D_2
							DIN ISO 4762-12.9								DIN 7984-8.8			
								M_A Nm		M_A Nm		M_A Nm		M_A Nm		M_A Nm		
4,3	7,6	4,75	7	5,8	15	7,6	M5	5,8	M4	5	M4	5	–	–	M4	2	4,6	4,5
4,5	11	5,25	10	7,5	17	8,6	M6	10	M5	10	M5	10	M5	10	–	–	5,8	5,5
	8,6		8	6							M5	10	–	–	M5	4		
5,1	10,9	5,25	10	10	18,7	8,2	M8	24	M6	17	M6	17	M6	17	–	–	6,8	6,7
	9,3			8									–	–	M6	8		
5,9	13,8	6,25	12	11,5	23,5	11	M10	41	M8	41	M8	41	M8	41	–	–	9	8,6
	9,8			9									–	–	M8	12		
6,7	14,3	6,75	13	12,3	27	14,5	M10	41	M8	41	M8	41	M8	41	–	–	9	8,6
	10,3			8,3									–	–	M8	12		
9,7	19,9	9,25	15	15	34,2	15,7	M12	83	M12	140	M10	83	M10	83	–	–	13,4	10,6
	17,2			11									–	–	M10	35		
13,5	22,7	11,25	21	18	41,5	19	M14	140	M14	220	M12	140	M12	140	–	–	15,4	12,5

ALMOTION B.V. Nijverheidsweg 14 | 6662 NG Elst (Gld) | The Netherlands | +31(0)85 0491 777 e info@almotion.nl | www.almotion.nl | www.lineairegeleiding.nl | www.lineairegeleidingshop.nl | www.linearmotion.nl

Four-row linear recirculating ball bearing and guideway assemblies

Full complement
Standard, L, N and NL carriages

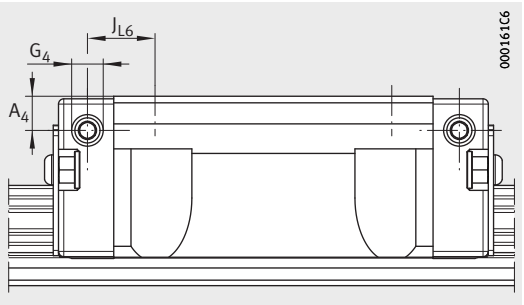

Lubrication connector on lateral face

Dimension table (continued) · Dimensions in mm

Designation	Carriage		Guideway		Lubrication connectors		
	Designation	Mass m ≈ kg	Designation	Mass m ≈ kg/m	A_3	G_3	2)
KUVE15-B	KWVE15-B	0,2	TKVD15-B[3]	1,44	4,3	M3	5,5
KUVE20-B	KWVE20-B	0,44	TKVD20	2,2	7,7	M5	7
KUVE20-B-L	KWVE20-B-L	0,59					
KUVE20-B-N	KWVE20-B-N	0,37			4,7		
KUVE20-B-NL	KWVE20-B-NL	0,51					
KUVE25-B	KWVE25-B	0,68	TKVD25	2,7	11	M6	7
KUVE25-B-L	KWVE25-B-L	1					
KUVE25-B-N	KWVE25-B-N	0,56			6		
KUVE25-B-NL	KWVE25-B-NL	0,82					
KUVE30-B	KWVE30-B	1,2	TKVD30	4,3	11,5	M6	7
KUVE30-B-L	KWVE30-B-L	1,7					
KUVE30-B-N	KWVE30-B-N	1			7,5		
KUVE30-B-NL	KWVE30-B-NL	1,5					
KUVE35-B	KWVE35-B	1,75	TKVD35	5,7	12,3	M6	7
KUVE35-B-L	KWVE35-B-L	2,52					
KUVE35-B-N	KWVE35-B-N	1,56			8,3		
KUVE35-B-NL	KWVE35-B-NL	2,23					
KUVE45-B	KWVE45-B	3,3	TKVD45	9,2	16,5	M6	7
KUVE45-B-L	KWVE45-B-L	4,3					
KUVE45-B-N	KWVE45-B-N	2,72			8,5		
KUVE45-B-NL	KWVE45-B-NL	3,38					
KUVE55-B	KWVE55-B	5,5	TKVD55-B	14	15	M6	7
KUVE55-B-L	KWVE55-B-L	6,6					

1) Calculation of basic load ratings in accordance with DIN ISO 14728-1.
Based on practical experience, it may be possible to increase the basic dynamic load rating.
The basic load rating can only be transmitted fully if the whole thread length is used and the adjacent construction is dimensioned appropriately.

2) Maximum permissible screw depth for lubrication connectors.

3) The new carriages cannot be used on the previous guideways TKVD15 or TKVD15-U.

4) Lubrication connectors are included loose:
- S04 with KUVE20-B
- S05 with KUVE25-B to KUVE55-B
- S16 with KUVE15-B.

ALMOTION B.V. Nijverheidsweg 14 | 6662 NG Elst (Gld) | The Netherlands t +31 (0)85 0491 777 e info@almotion.nl | www.almotion.nl | www.linearregeleiding.nl | www.linearregeleidingshop.nl | www.linearmotion.nl

ALMOTION

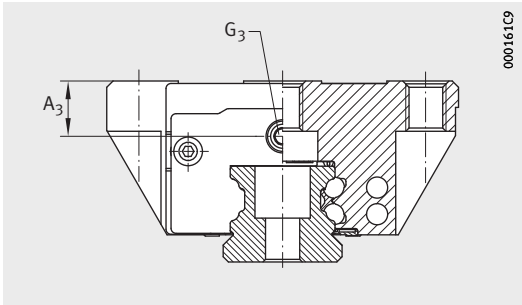

Lubrication connector on end face

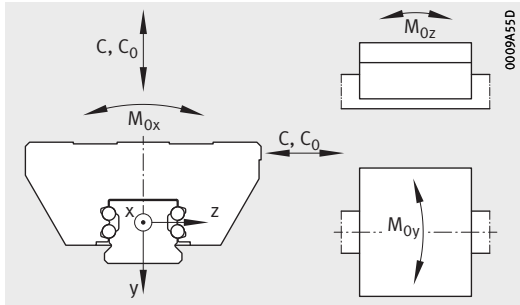

Load directions

				Load carrying capacity				
A_4	G_4		J_{L6}	Basic load ratings[1]		Moment ratings		
		[2]		dyn. C	stat. C_0	M_{0x}	M_{0y}	M_{0z}
				N	N	Nm	Nm	Nm
3,2	M3	5,5	9,1	7 200	14 500	150	100	100
4,6	M5	5,5	9,4	13 100	27 000	332	240	240
			18,9	16 200	36 500	452	430	430
3,3	M3		9,4	13 100	27 000	332	240	240
			18,9	16 200	36 500	452	430	430
6,5	M6	7	12,85	17 900	37 000	510	395	395
			25,75	23 400	54 000	745	825	825
4	M3	6	12,05	17 900	37 000	510	395	395
			24,95	23 400	54 000	745	825	825
7	M6	7	15,5	27 500	55 000	970	700	700
			29,5	34 500	74 000	1 310	1 240	1 240
4,95	M5		15,1	27 500	55 000	970	700	700
			29,1	34 500	74 000	1 310	1 240	1 240
11	M6	7	16	38 000	72 000	1 465	1 020	1 020
			32,5	47 500	100 000	2 625	1 890	1 890
7			16	38 000	72 000	1 465	1 020	1 020
			32,5	47 500	100 000	2 625	1 890	1 890
16,5	M6	7	19,25	69 000	141 000	3 610	2 485	2 485
			35,3	82 000	181 000	4 635	4 000	4 000
8,5			19,25	69 000	141 000	3 610	2 485	2 485
			35,5	82 000	181 000	4 635	4 000	4 000
15	M6	7	30,5	104 000	213 000	5 600	2 730	2 730
			49,5	127 000	285 000	7 500	4 725	4 800

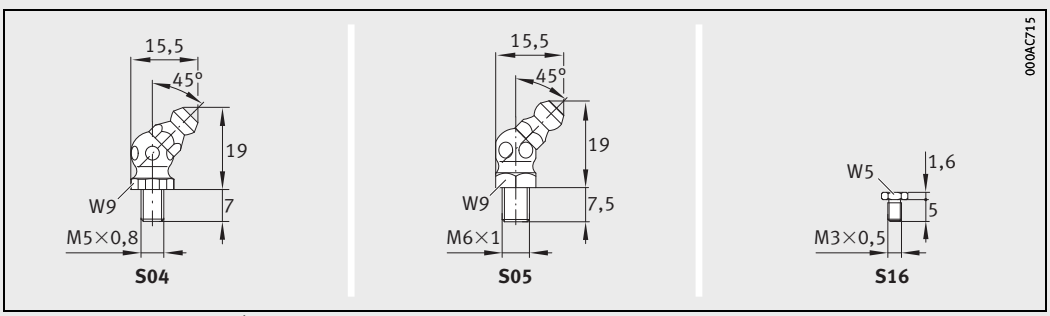

Lubrication connectors[4]

ALMOTION B.V. Nijverheidsweg 14 | 6662 NG Elst (Gld) | The Netherlands | +31(0)85 0491 777 e info@almotion.nl | www.almotion.nl | www.lineairegeleiding.nl | www.lineairegeleidingshop.nl | www.linearmotion.nl

Four-row linear recirculating ball bearing and guideway assemblies

Full complement
ESC carriages

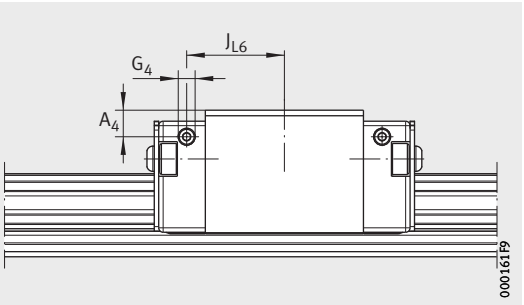

Lubrication connector on lateral face

Dimension table (continued) · Dimensions in mm

Designation	Carriage		Guideway		Lubrication connectors		
	Designation	Mass m ≈ kg	Designation	Mass m ≈ kg/m	A_3	G_3	2)
KUVE15-B-ESC	KWVE15-B-ESC	0,12	TKVD15-B[3)]	1,44	4,3	M3	5,5
KUVE20-B-ESC	KWVE20-B-ESC	0,18	TKVD20	2,2	6	M5	7
KUVE25-B-ESC	KWVE25-B-ESC	0,3	TKVD25	2,7	8	M6	7
KUVE30-B-ESC	KWVE30-B-ESC	0,57	TKVD30	4,3	11,5	M6	7
KUVE35-B-ESC	KWVE35-B-ESC	1,04	TKVD35	5,7	12,3	M6	7
KUVE45-B-ESC	KWVE45-B-ESC	1,8	TKVD45	9,2	16,5	M6	7

1) Calculation of basic load ratings in accordance with DIN ISO 14728-1.
Based on practical experience, it may be possible to increase the basic dynamic load rating.
The basic load rating can only be transmitted fully if the whole thread length is used and the adjacent construction is dimensioned appropriately.

2) Maximum permissible screw depth for lubrication connectors.

3) The new carriages cannot be used on the previous guideways TKVD15 or TKVD15-U.

4) Lubrication connectors are included loose:
- S04 with KUVE20-B
- S05 with KUVE25-B to KUVE55-B
- S16 with KUVE15-B.

ALMOTION B.V. Nijverheidsweg 14 | 6662 NG Elst (Gld) | The Netherlands t +31 (0)85 0491 777 e info@almotion.nl | www.almotion.nl | www.lineairegeleiding.nl | www.lineairegeleidingshop.nl | www.linearmotion.nl

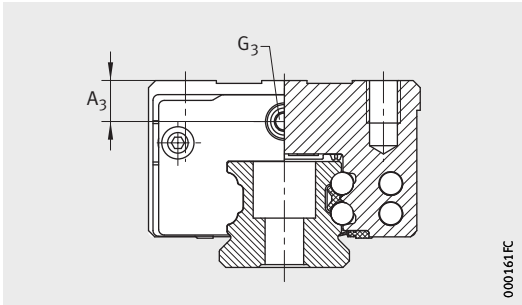

Lubrication connector on end face

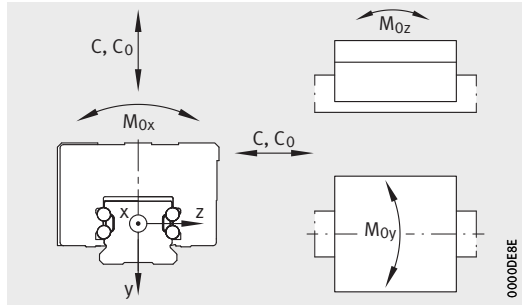

Load directions

				Load carrying capacity				
A_4	G_4		J_{L6}	Basic load ratings[1]		Moment ratings		
		[2]		dyn. C N	stat. C_0 N	M_{0x} Nm	M_{0y} Nm	M_{0z} Nm
3,2	M3	5,5	15,8	4 900	8 300	86	35	35
4,3	M3	5,5	18,9	8 900	15 400	190	85	85
6	M3	6	22	12 500	22 200	305	155	155
7	M6	7	26,5	18 700	31 500	554	248	248
11	M6	7	29,1	24 600	39 000	790	330	330
16,5	M6	7	37,9	46 500	80 000	2 060	883	883

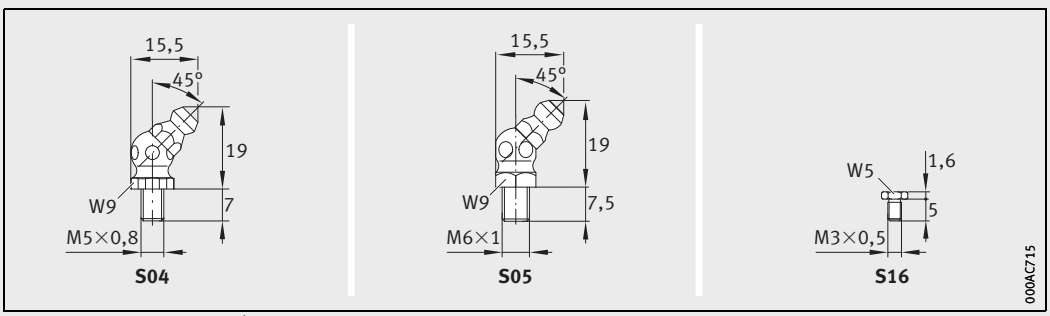

Lubrication connectors[4]

ALMOTION B.V. Nijverheidsweg 14 | 6662 NG Elst (Gld) | The Netherlands | +31(0)85 0491 777 e info@almotion.nl | www.almotion.nl | www.lineairegeleiding.nl | www.lineairegeleidingshop.nl | www.linearmotion.nl

Four-row linear recirculating ball bearing and guideway assemblies

Full complement
Wide guideway
W and WL carriages

Dimension table · Dimensions in mm

Designation	Dimensions				Mounting dimensions										
	l_{max} [2]	H	B	L	A_1	J_B	j_B	a_5	b	A_2	L_1	J_L	j_L	a_L, a_R [3]	
														min.	max.
KUVE15-W	2 890	21	68	55,6	15,5	60	22	7,5	37	4	39,8	29	50	20	44
KUVE20-W	2 880	27	80	69,8	19	70	24	9	42	5	50,4	40	60	20	53
KUVE20-WL				87,3							67,9				
KUVE25-W	5 860	35	120	81,7	25,5	107	40	14,5	69	6,5	60,7	45	80	20	71
KUVE25-WL				107,5							86,5	60			
KUVE30-W	5 860	42	142	97,5	31	124	50	15	80	9	72	52	80	20	71
KUVE35-WL	5 860	50	162	140,2	36	144	60	15	90	9	109,8	80	80	20	71

Further table values, see page 342 and page 343.

⟨1⟩ Locating face. ⟨2⟩ Marking.

1) The stated torques represent maximum values for the secure transmission of forces in vibration-free, quasistatic applications ($S_0 = 1$). We recommend that the tightening torques for the screw connection of the adjacent construction should be determined at the customer under the conditions specific to the application and operation, observing the information in VDI Guideline 2230 Part 1 (2015) and the information in this description, see page 69 and page 26.

2) Maximum length of single-piece guideways.
Permissible number of guideway segments, see page 309.

3) a_L and a_R are dependent on the guideway length.

4) For location from above:
The maximum screw depth for the two central threaded holes is T_6 + 2,5 mm.

ALMOTION B.V. Nijverheidsweg 14 | 6662 NG Elst (Gld) | The Netherlands t +31(0)85 0491 777 e info@almotion.nl | www.almotion.nl | www.lineairegeleiding.nl | www.lineairegeleidingshop.nl | www.linearmotion.nl

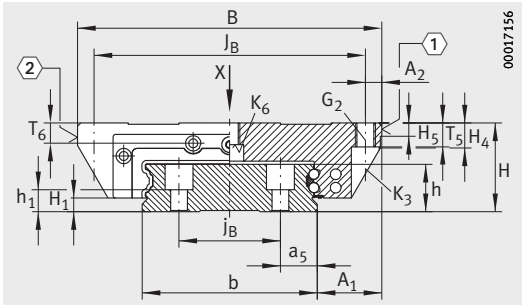

KUVE..-W, KUVE..-WL

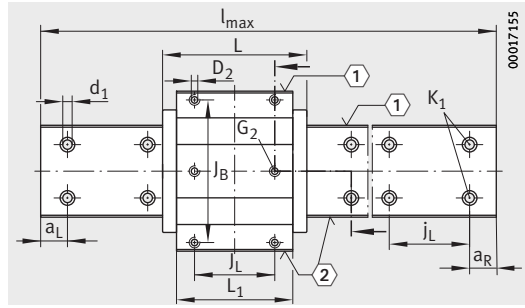

KUVE..-W, KUVE..-WL
View X rotated 90°

							Fixing screws[1]											
H_1	H_5	H_4	T_5	T_6[4]	h	h_1	G_2		K_1		K_3		K_6		K_6		d_1	D_2
							DIN ISO 4762-12.9								DIN 7984-8.8			
								M_A Nm		M_A Nm		M_A Nm		M_A Nm		M_A Nm		
2,1	4,5	7,7	7	4,8	12,9	6	M5	5,8	M4	5	M4	5	–	–	M4	2	4,6	4,5
4,6	5	10,6	10	6	17	10	M6	10	M4	5	M5	10	–	–	M5	4	4,6	5,5
				6									M6	17	–	–		
5,2	5	9,9	10	8,5	18,7	8,2	M8	41	M6	17	M6	17	–	–	M6	8	6,8	6,7
				10									M6	17	–	–		
6	6	13,8	12	12	23,5	11	M10	41	M8	41	M8	41	–	–	M8	12	9	8,6
6,8	6,5	16,3	13	13	27	14,5	M10	41	M8	41	M8	41	M8	41	–	–	9	8,6

ALMOTION B.V. Nijverheidsweg 14 | 6662 NG Elst (Gld) | The Netherlands | t +31(0)85 0491 777 e info@almotion.nl | www.almotion.nl | www.lineairegeleiding.nl | www.lineairegeleidingshop.nl | www.linearmotion.nl

Four-row linear recirculating ball bearing and guideway assemblies

Full complement
Wide guideway
W and WL carriages

Dimension table (continued) · Dimensions in mm

Designation	Carriage		Guideway	
	Designation	Mass m ≈ kg	Designation	Mass m ≈ kg/m
KUVE15-W	KWVE15-W	0,27	TKVD15-W	3,6
KUVE20-W	KWVE20-W	0,5	TKVD20-W	5
KUVE20-WL	KWVE20-WL	0,7		
KUVE25-W	KWVE25-W	1,1	TKVD25-W	9,4
KUVE25-WL	KWVE25-WL	1,46		
KUVE30-W	KWVE30-W	1,95	TKVD30-W	13,6
KUVE35-WL	KWVE35-WL	4,11	TKVD35-W	17,4

1) Calculation of basic load ratings in accordance with DIN ISO 14728-1.
Based on practical experience, it may be possible to increase the basic dynamic load rating.
The basic load rating can only be transmitted fully if the full thread length is used and the adjacent construction is dimensioned accordingly.

2) Maximum permissible screw depth for lubrication connectors.

3) Lubrication connectors are included loose:
- S04 with KUVE20-W
- S05 with KUVE25-W to KUVE35-WL
- S16 with KUVE15-W.

ALMOTION B.V. Nijverheidsweg 14 | 6662 NG Elst (Gld) | The Netherlands t +31 (0)85 0491 777 e info@almotion.nl | www.almotion.nl | www.lineairegeleiding.nl | www.lineairegeleidingshop.nl | www.linearmotion.nl

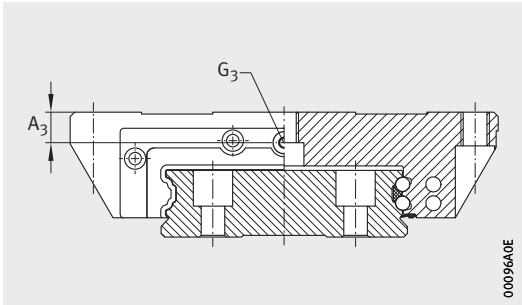

Lubrication connector on end face

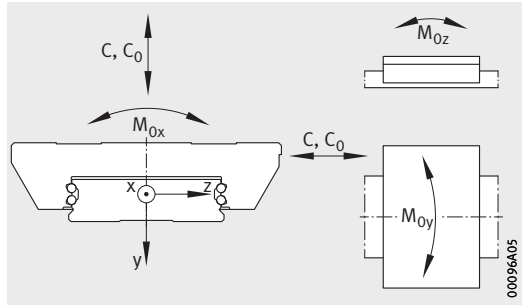

Load directions

Lubrication connectors			Load carrying capacity				
A_3	G_3		Basic load ratings[1]		Moment ratings		
		[2]	dyn. C N	stat. C_0 N	M_{0x} Nm	M_{0y} Nm	M_{0z} Nm
3,6	M3	4	7 200	14 500	332	100	100
5	M5	5	13 100	27 000	687	240	240
			16 200	36 500	920	400	400
10	M6	6	17 900	37 000	1 470	395	395
			23 400	54 000	2 225	825	825
11,25	M6	6	27 500	55 000	2 660	700	700
14,3	M6	6	47 500	100 000	5 550	1 890	1 890

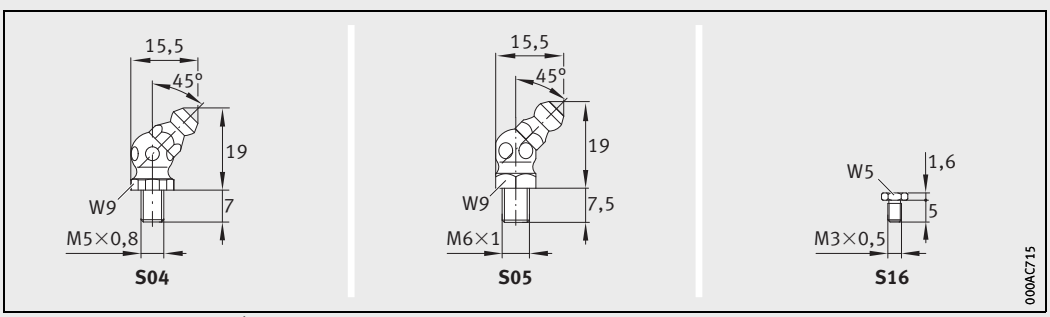

Lubrication connectors[3]

ALMOTION B.V. Nijverheidsweg 14 | 6662 NG Elst (Gld) | The Netherlands | +31(0)85 0491 777 e info@almotion.nl | www.almotion.nl | www.lineairegeleiding.nl | www.lineairegeleidingshop.nl | www.linearmotion.nl

Adjusting gibs

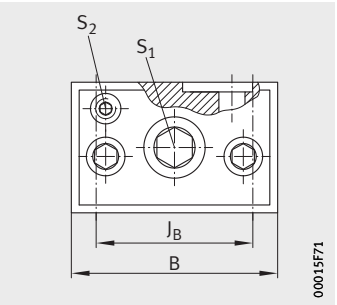

VUSZ..-A

Dimension table · Dimensions in mm

Designation	Mass	Dimensions			Mounting dimensions							
		L	H	B	L_1	L_2	J_B	J_L	J_{L2}	J_{L5}	Q_1	A_3
	≈ kg	max.	min.			max.	±0,1	±0,1			max.	
VUSZ12044-A	0,19	78	16	25	62	73	19	25,5	16,5	16,5	7	14,2
VUSZ18059-A	0,63	107	25	37,6	85	99	31	38	20,5	20	8	22,3
VUSZ24084-A	1,38	141	30	50	115	131	41	51	28	30,5	8	28,5

1) Depending on the size, socket head screws to DIN ISO 4762 or grub screws to DIN ISO 4026 are used.

2) The stated torques represent maximum values for the secure transmission of forces in vibration-free, quasistatic applications (S_0 = 1). We recommend that the tightening torques for the screw connection of the adjacent construction should be determined at the customer under the conditions specific to the application and operation, observing the information in VDI Guideline 2230 Part 1 (2015) and the information in this description, see page 26, page 69, page 481 and page 527.

3) Linear roller bearings, see page 548 and 552.

4) Through lubrication hole, use of sealing rings not necessary.

5) S = hexagon socket.

ALMOTION B.V. Nijverheidsweg 14 | 6662 NG Elst (Gld) | The Netherlands t +31(0)85 0491 777 e info@almotion.nl | www.almotion.nl | www.lineairegeleiding.nl | www.lineairegeleidingshop.nl | www.lineairmotion.nl

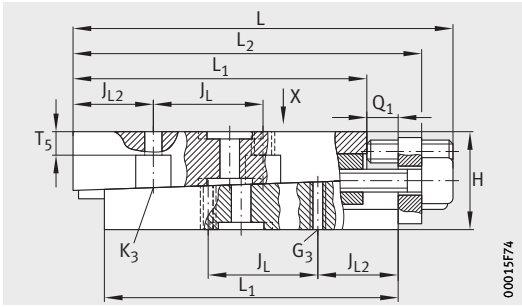

VUSZ..-A

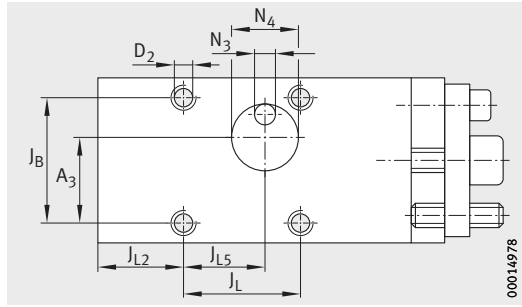

VUSZ..-A
View X

			Adjustment screw	Locking and extraction screw[1]	Fixing screws[2]			Adjustment		For linear roller bearing[3]
N_3[4]	N_4	T_5	S_1[5]	S_2[5]	K_3, G_3 DIN ISO 4762-12.9		D_2	Δh	per screw revolution	
						M_A Nm		max.		
3,5	12	4	3	2	M3	1,8	3,6	0,35	0,035	PR14044
5	16	6	6	3	M4	5	5	0,4	0,05	PR14061
5	22	7	8	4	M5	10	6	0,4	0,062	PR14089

ALMOTION B.V. Nijverheidsweg 14 | 6662 NG Elst (Gld) | The Netherlands t +31(0)85 0491 777 e info@almotion.nl | www.almotion.nl | www.lineairegeleiding.nl | www.lineairegeleidingshop.nl | www.linearmotion.nl

Setting device

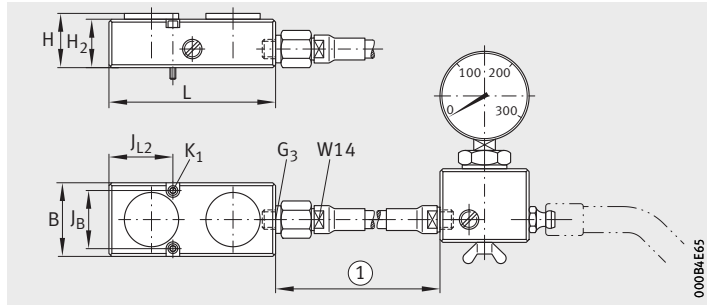

EUS

Dimension table · Dimensions in mm

Designation	For linear roller bearing	Dimensions			Mounting dimensions						High pressure rubber hose HDS 01/....	Distributor with manometer VBM
		A_K cm²	H max.	B	L	J_B	J_{L2}	H_2	K_1	G_3		
EUS19	RUS19069	5	19,5	25,4	72	20,6	28	18	M3×20	$R^1/_8''$		
	RUS19105											
	PR14044											
EUS26	RUS26086	10	28	38	86	30	33	25	M4×20	$R^1/_8''$	l = 250 01/250	
	RUS26102											
EUS14061	PR14061	10	30	38	85	31	33	27,5	M4×30	$R^1/_8''$	l = 400 01/400	01
EUS26126	RUS26126	15	28	38	115	30	33	25	M4×30	$R^1/_8''$		
EUS38	RUS38134	20	40	50,8	115	41	44	36	M6×40	$R^1/_8''$	l = 1000 01/1000	
	PR14089											
EUS38206	RUS38206	30	40	50,8	200	41	59	36	M×40	$R^1/_8''$		
EUS65	RUS65210	60	70	75	200	62	37	60	M8×70	$R^1/_8''$		
EUS85	RUS85280	100	90	100	250	82,5	89	80	M10×90	$R^1/_8''$		

ALMOTION B.V. Nijverheidsweg 14 | 6662 NG Elst (Gld) | The Netherlands t +31(0)85 0491 777 e info@almotion.nl | www.almotion.nl | www.lineairegeleiding.nl | www.lineairegeleidingshop.nl | www.linearmotion.nl

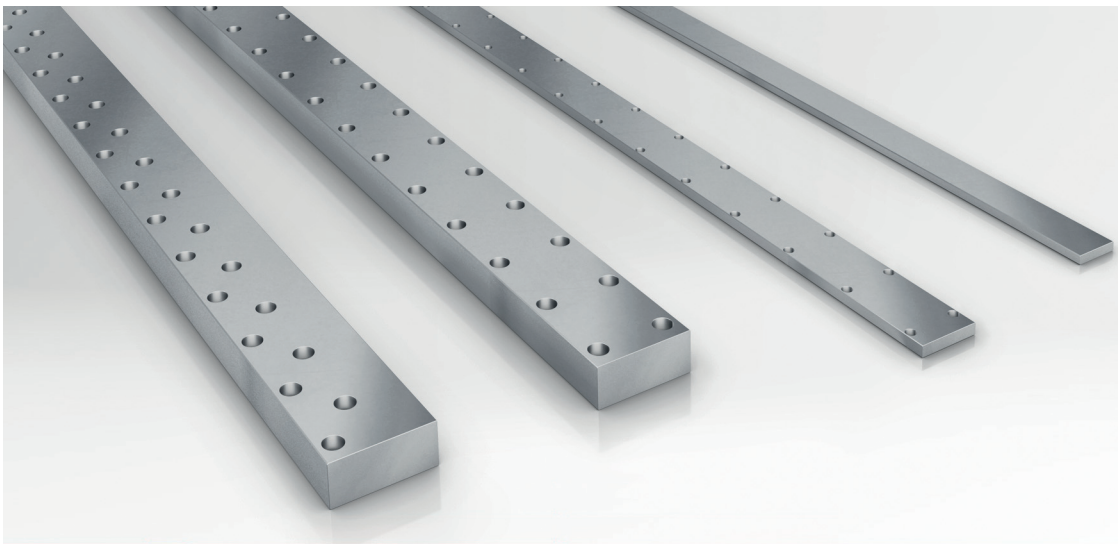

Guideways

ALMOTION B.V. Nijverheidsweg 14 | 6662 NG Elst (Gld) | The Netherlands t +31(0)85 0491 777 e info@almotion.nl | www.almotion.nl | www.lineairegeleiding.nl | www.lineairegeleidingshop.nl | www.linearmotion.nl

ALMOTION

Guideways

		Page
Product overview	Guideways	568
Features	Guideways with four raceways	569
	Guideways with three raceways	570
	Guideways with one raceway	571
	Available designs	571
Design and safety guidelines		571
Accuracy	Quality grades	572
	Sorted guideways S	572
	Positional and length tolerances of guideways	573
Ordering example, ordering designation		574
Dimension tables	Guideways with four raceways	576
	Guideways with three raceways	578
	Guideways with one raceway	580

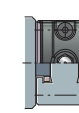

ALMOTION B.V. Nijverheidsweg 14 | 6662 NG Elst (Gld) | The Netherlands t +31(0)85 0491 777 e info@almotion.nl | www.almotion.nl | www.lineairegeleiding.nl | www.lineairegeleidingshop.nl | www.linearmotion.nl

Product overview Guideways

With four raceways

UG, UGN

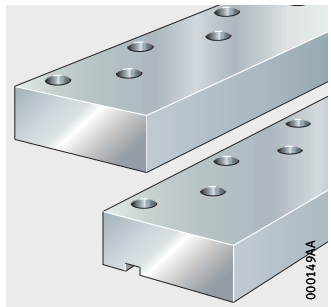

With three raceways

UZ, UZN

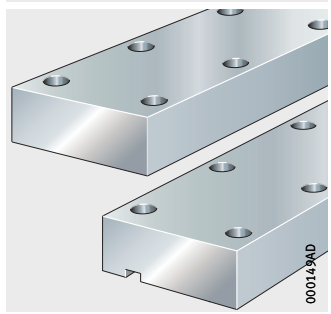

With one raceway

For screw mounting or clamping

UFB, UFK

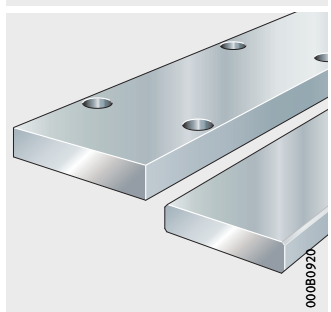

ALMOTION B.V. Nijverheidsweg 14 | 6662 NG Elst (Gld) | The Netherlands t +31(0)85 0491 777 e info@almotion.nl | www.almotion.nl | www.lineairegeleiding.nl | www.lineairegeleidingshop.nl | www.linearmotion.nl

Guideways

Features

Due to their precision, these guideways can be combined with INA linear roller bearings to give high precision linear recirculating guidance systems

They are made from through hardened tool steel (min. 670 HV) and have precision ground raceways of roughness Ramax 0,4 (Rzmax 2).

The guideways are of a single piece design up to the maximum length in the dimension tables, while longer guideways are assembled from segments that are matched to each other and marked.

Guideways with four raceways

Guideways UG and UGN have a rectangular cross-section, an offset hole pattern and four raceways for linear roller bearings.

They can support forces in the main load direction, together with forces in the opposing direction if a counterstay is fitted, as well as lateral forces in two directions.

The through holes have cylindrical counterbores for fixing screws in accordance with DIN ISO 4762, *Figure 1*.

For high lateral forces

The design UGN with a continuous slot for a square steel bar in accordance with DIN EN 10278 is particularly suitable for supporting high lateral forces in two directions, *Figure 1*.

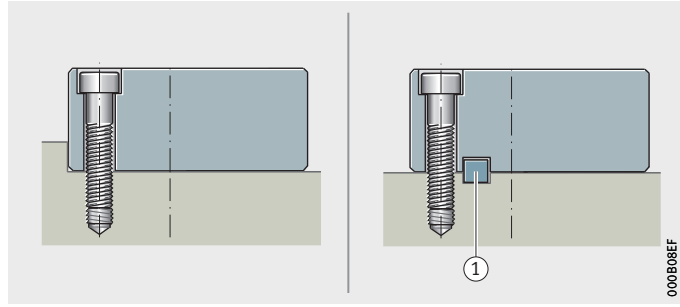

UG
UGN

① Square steel bar

Figure 1
Location methods

ALMOTION B.V. Nijverheidsweg 14 | 6662 NG Elst (Gld) | The Netherlands t +31(0)85 0491 777 e info@almotion.nl | www.almotion.nl | www.lineairegeleiding.nl | www.lineairegeleidingen.nl | www.linearmotion.nl

Guideways

Guideways with three raceways

Guideways UZ and UZN have a rectangular cross-section, a parallel hole pattern and three raceways for linear roller bearings. The upper raceway is arranged between the holes for the fixing screws.

They can support forces in the main load direction and lateral forces in two directions.

The through holes have cylindrical counterbores for fixing screws in accordance with DIN ISO 4762, *Figure 2*.

For high lateral forces

The design UZN with a continuous slot for a square steel bar in accordance with DIN EN 10278 is particularly suitable for supporting high lateral forces in two directions, *Figure 2*.

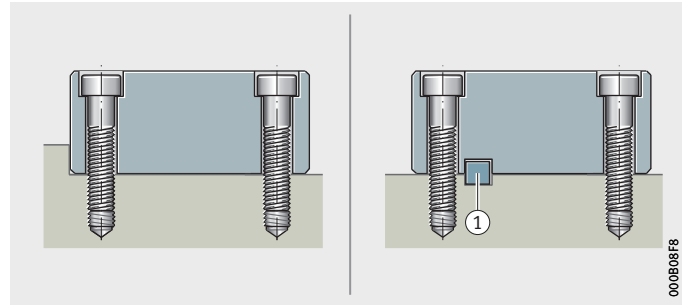

UZ
UZN

① Square steel bar

Figure 2
Location methods

ALMOTION B.V. Nijverheidsweg 14 | 6662 NG Elst (Gld) | The Netherlands t +31(0)85 0491 777 e info@almotion.nl | www.almotion.nl | www.lineairegeleiding.nl | www.lineairegeleidingshop.nl | www.linearmotion.nl

Guideways with one raceway

Guideways UFB and UFK have only one raceway and, due to their small section height, are particularly suitable for low guidance system heights.

They can support forces in the main load direction.

Mounting by clamping or screws

For simple location, the guideways UFK are suitable for clamping. Clamping is carried out in the slot using the high precision steel strip, *Figure 3*.

The design UFB has through holes and cylindrical counterbores for fixing screws in accordance with DIN ISO 4762.

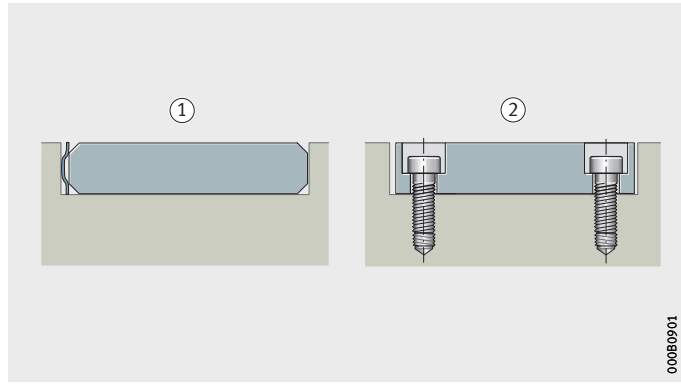

① UFK guideway, clamped
② UFB guideway, screw mounted

Figure 3
Location methods

Available designs

In addition to the standard designs, coated guideways and guideways according to customer drawing are also available by agreement.

Design and safety guidelines

In order to achieve high running accuracy and constant displacement resistance, the mounting guidelines must be observed,
see page 474.

ALMOTION B.V. Nijverheidsweg 14 | 6662 NG Elst (Gld) | The Netherlands t +31(0)85 0491 777 e info@almotion.nl | www.almotion.nl | www.lineairegeleiding.nl | www.lineairegeleidingshop.nl | www.linearmotion.nl

Accuracy
Quality grades

The guideways are available in the quality grades Q2, Q6, Q10 and Q20, *Figure 4*. The standard grade is Q10:

- Q2 is used for the highest requirements in high precision machinery. This grade should only be used if the adjacent construction can be produced to equally high accuracy.
- Q6 corresponds to the requirements of precision table guidance systems in machine tool construction and is used as standard in arrangements with a counterstay.
- Q10 is the standard quality grade and is suitable for all requirements in general mechanical engineering.
- Q20 corresponds to the requirements in the handling sector.

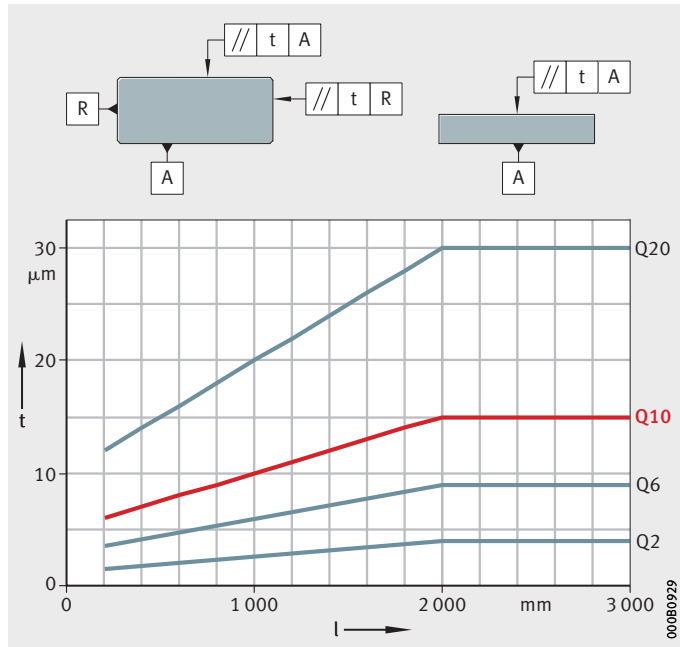

t = parallelism tolerance
l = guideway length

Figure 4
Quality grades and parallelism tolerances of guideways

Sorted guideways S

Guideways are sorted together if two or more guideways of the same profile are mounted in the same plane adjacent to each other or in series.

The sorting affects the positional accuracy of the raceways in relation to the mounting surfaces. The guideways are, within the respective quality grade, sorted and marked according to their height.

Sorting of the guideways is indicated by the suffix S and the number of sorted guideways.

Example: 2 pieces **UG9741×2000-Q6-2S**

ALMOTION B.V. Nijverheidsweg 14 | 6662 NG Elst (Gld) | The Netherlands t +31(0)85 0491 777 e info@almotion.nl | www.almotion.nl | www.lineairegeleiding.nl | www.lineairegeleidingshop.nl | www.linearmotion.nl

Positional and length tolerances of guideways

In the adjacent construction, a positional tolerance of ∅ 0,2 mm must be observed, in order that guideways up to the maximum guideway length, see table, can be mounted on a predrilled hole pattern. This also applies to multi-piece guideways if the individual partial length does not exceed the maximum guideway length, in accordance with the table.

The positional tolerances and maximum lengths of the guideways are shown in the table and *Figure 5*.

Positional tolerances of fixing holes

Guideway Designation	Positional tolerance P mm	Guideway length l_{max} mm
UG6628, UGN6628 UZ6628, UZN6628	1,8	2 500
UG9741, UGN9741 UZ9741, UZN9741	2,3	3 000
UG12553, UGN12553 UZ12553, UZN12553	1,8	2 000
UG16260, UGN16260 UZ16260, UZN16260	2,3	2 000
UFB4710	1,1	1 800
UFB6412	1,1	1 600
UFB7812	1,1	1 600
UFB10615	1,2	1 700
UFB14018	1,8	2 800

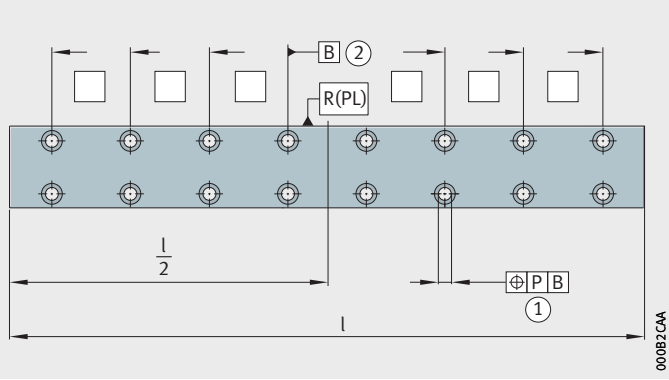

① Positional tolerance of all holes

② Datum B is the hole that is closest to the centre of the guideway (based on DIN 644)

Figure 5
Positional tolerances of the hole pattern

Single guideways of a different guideway length have the positional tolerance l · 0,0008 + 0,2 mm.

Length tolerances of guideways

Length tolerance	
Single-piece guideways mm	Multi-piece guideways mm
l ± (0,2 + 0,0008 · l)	l_{tot} ± 2 mm

ALMOTION B.V. Nijverheidsweg 14 | 6662 NG Elst (Gld) | The Netherlands t +31(0)85 0491 777 e info@almotion.nl | www.almotion.nl | www.lineairegeleiding.nl | www.lineairegeleiding.shop.nl | www.linearmotion.nl

Ordering example, ordering designation

Guideways for six machines	Twelve guideways, sorted in pairs for six machines:	
	Guideway	UG
	For linear roller bearings	RUS26126
	Profile size	UG9741
	Hole pattern of guideways – symmetrical	–
	Length of guideways	1000 mm
	Quality grade of guideways	Q6
Ordering designation	12×**UG9741**×**1000-Q6-2S**, *Figure 6*	

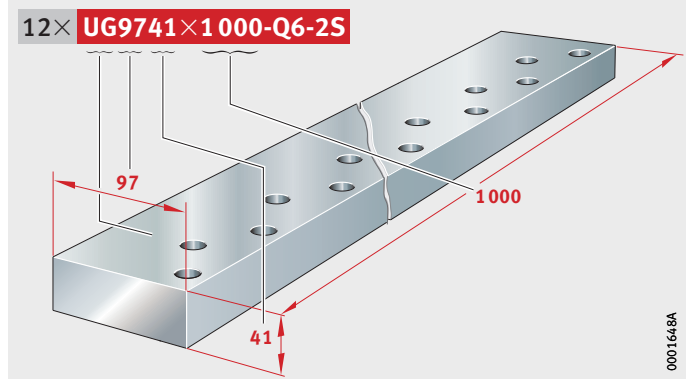

Figure 6
Ordering example, ordering designation

ALMOTION B.V. Nijverheidsweg 14 | 6662 NG Elst (Gld) | The Netherlands t +31(0)85 0491 777 e info@almotion.nl | www.almotion.nl | www.lineairegeleiding.nl | www.lineairegeleidingshop.nl | www.linearmotion.nl

Guideways

With four raceways

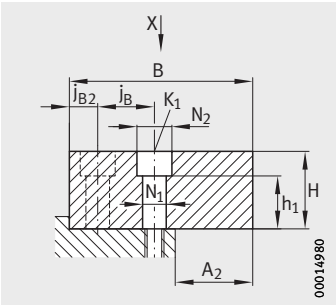

UG

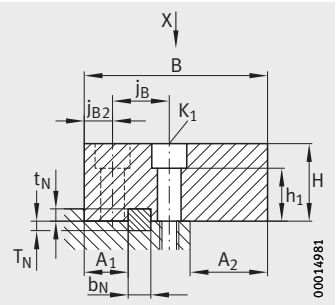

UGN

Dimension table · Dimensions in mm

Designation	Mass	Dimensions			Mounting dimensions							
	m	l_{max} [6]	H	B	j_B	j_{B2}	j_L	a_R, a_L [7]		h_1	A_2	N_2
	≈ kg/m		−0,1	−0,1				min.	max.		max.	
UG6628	13,8	2 000	28	66	18	12	40	15	35	16,5	28	15
UGN6628	13,6											
UG9741	29,8	3 000	41	97	30	15	40	15	35	27,5	41	18,5
UGN9741-A	28,2											
UG12553	49,9	3 000	53	125	35	18	40	15	35	37,5	53	20
UGN12553-A	49,0											
UG16260	72,0	3 000	60	162	44	20	40	20	40	35,5	77	26,5
UGN16260-A	70,6											

① Hole pattern on left side (BL). ② Hole pattern on right side (BR). ③ Hole pattern, symmetrical.

1) The remaining gap is filled with castable resin after fitting.

2) Square steel bar in accordance with DIN EN 10278 is not included in the scope of delivery.

3) The stated torques represent maximum values for the secure transmission of forces in vibration-free, quasistatic applications ($S_0 = 1$). We recommend that the tightening torques for the screw connection of the adjacent construction should be determined at the customer under the conditions specific to the application and operation, observing the information in VDI Guideline 2230 Part 1 (2015) and the information in this description, see page 26, page 69, page 481 and page 527.

4) Closing plugs must be ordered separately.

5) Linear roller bearings, see page 548, page 550 and page 552.

6) Maximum length of single-piece guideways; longer guideways are supplied as several segments.

7) Indicate hole pattern and end spacings a_R, a_L when ordering.

ALMOTION B.V. Nijverheidsweg 14 | 6662 NG Elst (Gld) | The Netherlands t +31(0)85 0491 777 e info@almotion.nl | www.almotion.nl | www.lineairegeleiding.nl | www.lineairegeleidingshop.nl | www.linearmotion.nl

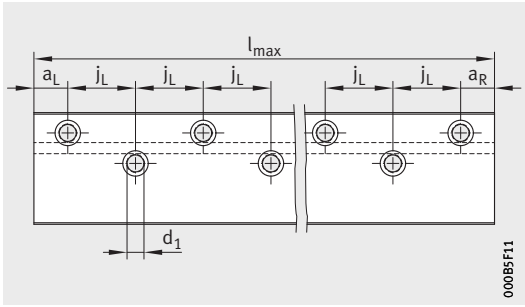

UG, UGN
View X rotated 90°

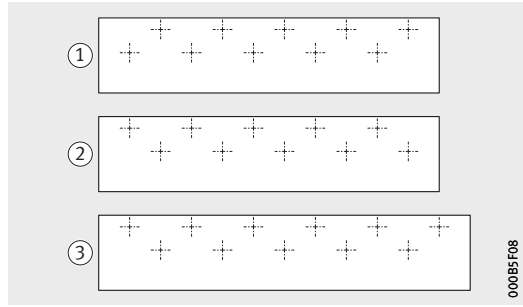

Hole patterns[7)]

Slot[1)]				Square steel bar[2)]	Fixing screws[3)]			Closing plug[4)]	For linear roller bearing[5)]		
A_1	b_N	T_N	t_N	DIN EN 10278	K_1 DIN ISO 4762-12.9		d_1				
						M_A Nm					
–	–	–	–	–	M8	41	10	KVK15	RUS19069 RUS19105	RUSV30069-KS RUSV30105-KS	PR14032 PR14044
17,75	6,5	2,5	3,5	5×5							
–	–	–	–	–	M10	83	12,5	KVK18,5	RUS26086 RUS26102 RUS26126	RUSV42086-KS RUSV42102-KS RUSV42126-KS	PR14061
23,25	12	5	6,5	10×10							
–	–	–	–	–	M12	140	14	KVK20	RUS38134 RUS38206	RUSV60134-KS RUSV60206-KS	PR14089
27	14	6	7,5	12×12							
–	–	–	–	–	M16	350	18,5	KA26,5-M	RUS65210	–	PR14135
31,25	18	8	9,5	16×16							

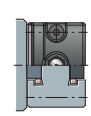

ALMOTION B.V. Nijverheidsweg 14 | 6662 NG Elst (Gld) | The Netherlands t +31(0)85 0491 777 e info@almotion.nl | www.almotion.nl | www.lineairegeleiding.nl | www.lineairegeleidingshop.nl | www.linearmotion.nl

9 Tolerances for height and spacing A_1

Tolerance		Accuracy	
		G1	G2 [1]
		µm	µm
Tolerance for height	H	±10	±20
Difference in height [2]	ΔH	7	15
Tolerance for spacing	A_1	±15	±25
Difference in spacing [2]	$ΔA_1$	10	20

1) Standard

2) Dimensional difference between several carriages on one guideway, measured at the same point on the guideway

8 Datum dimensions for parallelism of raceways to locating faces

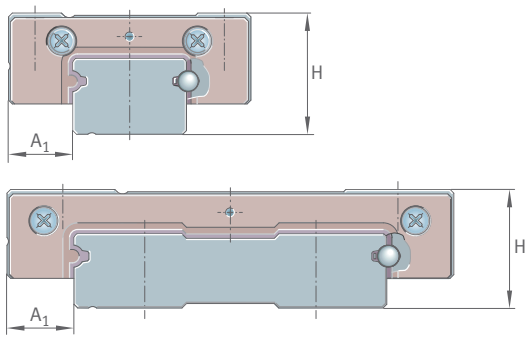

001B1F9E

2.6 Structure of the ordering designation

9 Ordering designation structure, carriage

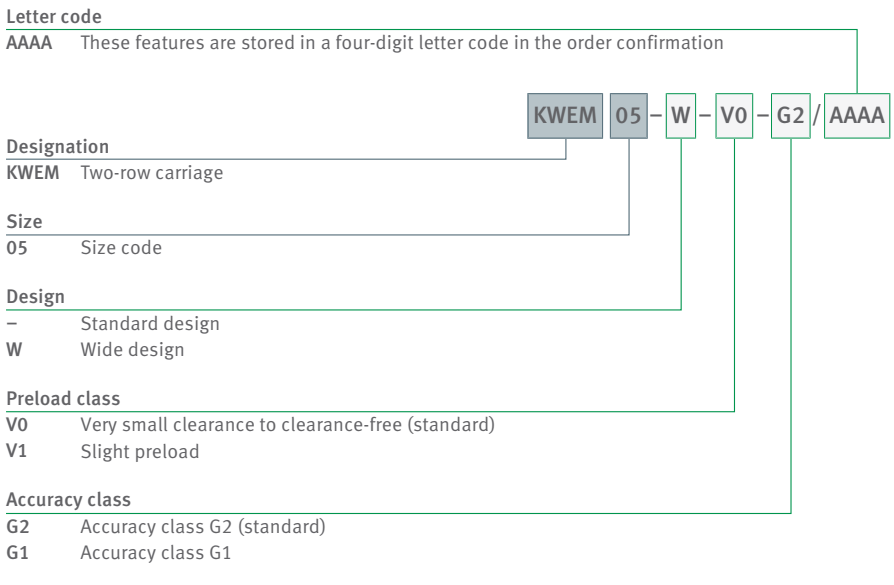

001B1B9D

ALMOTION B.V. Nijverheidsweg 14 | 6662 NG Elst (Gld) | The Netherlands t +31(0)85 0491 777 e info@almotion.nl
www.almotion.nl | www.lineairegeleiding.nl | www.lineairegeleidingshop.nl | www.linearmotion.nl

10 Ordering designation structure, guideway

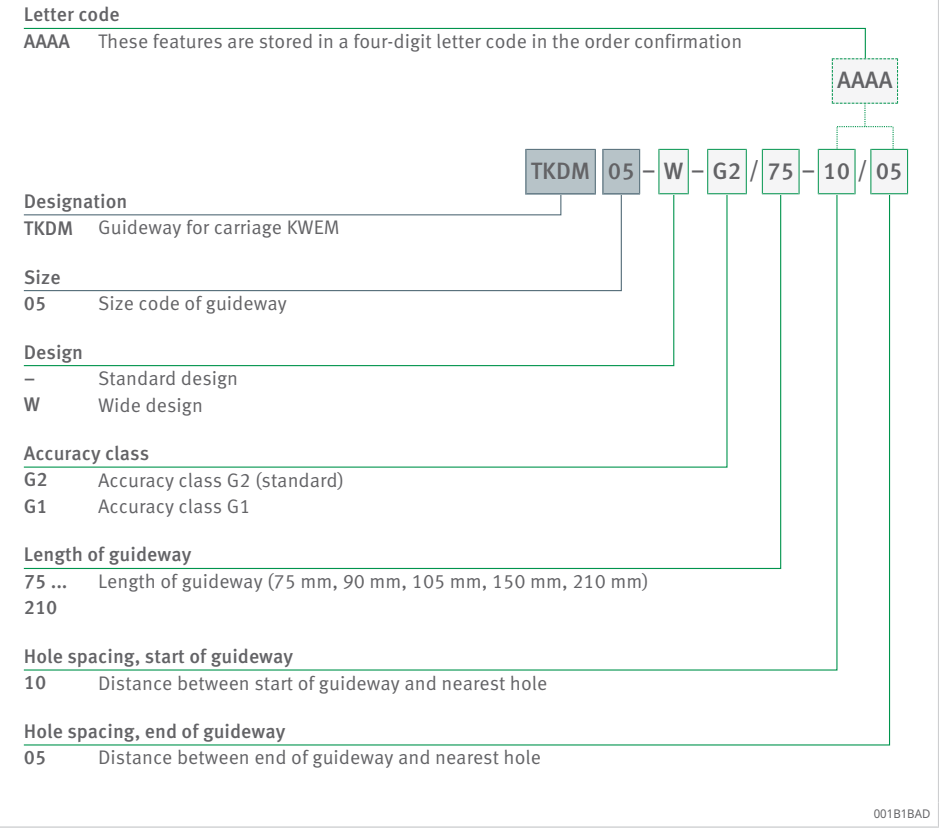

ALMOTION B.V. Nijverheidsweg 14 | 6662 NG Elst (Gld) | The Netherlands t +31(0)85 0491 777 e info@almotion.nl
www.almotion.nl | www.lineairegeleiding.nl | www.lineairegeleidingshop.nl | www.linearmotion.nl

2 carriages and matching guideway

An order is to be placed for 2 identical carriages and 1 matching guideway with a symmetrical hole pattern:

- 2 carriages: KWEM05
- size: 05
- preload: V0
- accuracy class: G2
- with end wipers
- matching guideway: TKDM05
- size: 05
- accuracy class: G2
- length: 160 mm

Ordering designation provided by the customer and in the order confirmation (with sample letter code):

- 2×KWEM05-V0-G2
- 1×TKDM05-G2/160

11 Ordering example, ordering designation

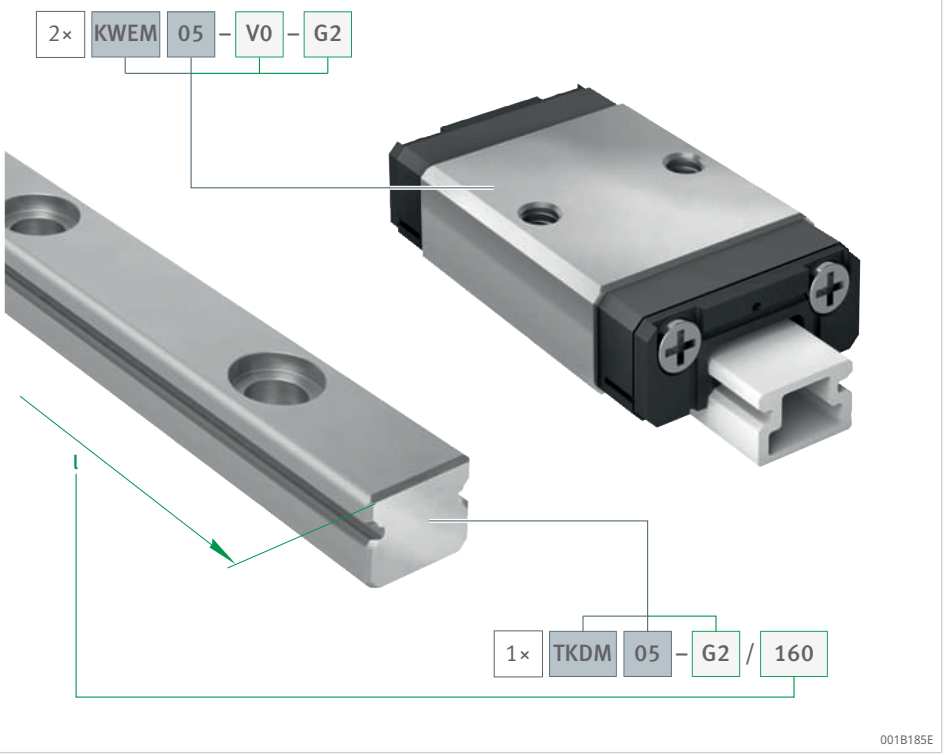

ALMOTION B.V. Nijverheidsweg 14 | 6662 NG Elst (Gld) | The Netherlands t +31(0)85 0491 777 e info@almotion.nl
www.almotion.nl | www.lineairegeleiding.nl | www.lineairegeleidingshop.nl | www.linearmotion.nl

Carriage

Single carriages can be ordered as follows:

- carriage: KWEM05
- size: 05
- preload: V0
- accuracy class: G2
- with end wipers

Ordering designation provided by the customer and in the order confirmation (with sample letter code):

- 1×KWEM05-V0-G2

12 Ordering example, ordering designation

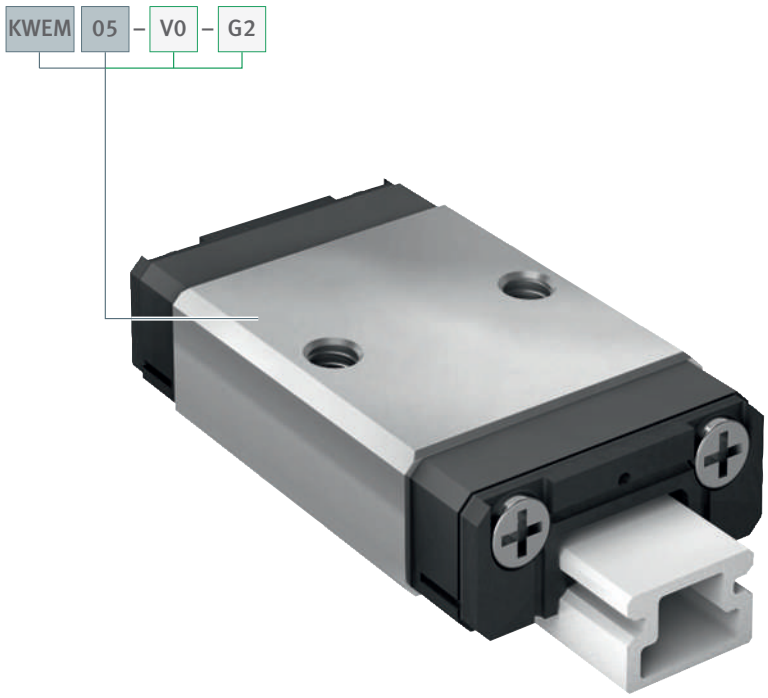

ALMOTION B.V. Nijverheidsweg 14 | 6662 NG Elst (Gld) | The Netherlands t +31(0)85 0491 777 e info@almotion.nl
www.almotion.nl | www.lineairegeleiding.nl | www.lineairegeleidingshop.nl | www.linearmotion.nl

Guideway

Single guideways can be ordered as follows:

- guideway that can be combined with the existing carriage of identical width and belonging to accuracy class G2:
  TKDM05
- size: 05
- accuracy class: G2
- length: 210 mm

Ordering designation provided by the customer and in the order confirmation (with sample letter code):

- 1×TKDM05-G2/210

13 Ordering example, ordering designation

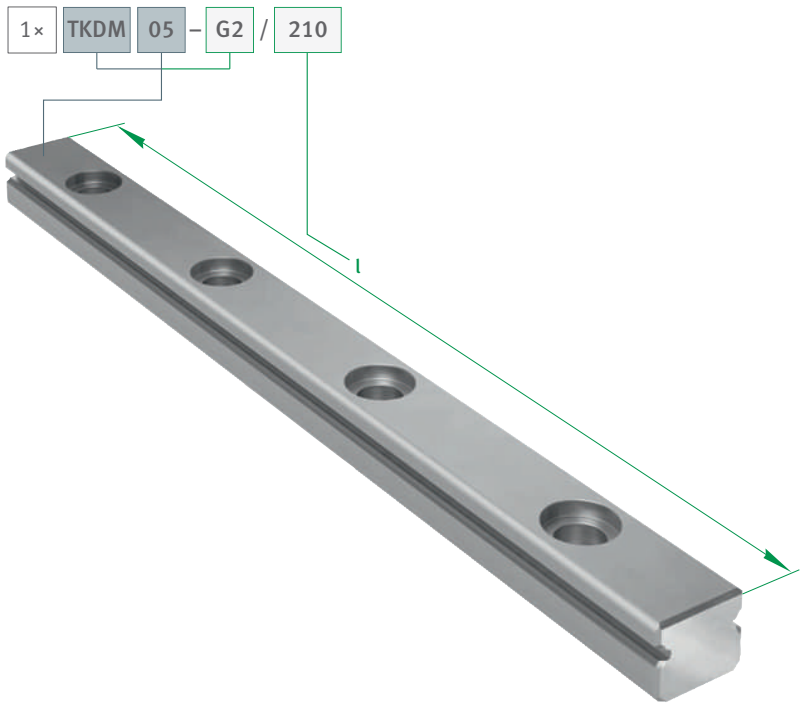

ALMOTION B.V. Nijverheidsweg 14 | 6662 NG Elst (Gld) | The Netherlands t +31(0)85 0491 777 e info@almotion.nl
www.almotion.nl | www.lineairegeleiding.nl | www.lineairegeleidingshop.nl | www.linearmotion.nl

3.6 Structure of the ordering designation

24 Ordering designation structure, guidance unit

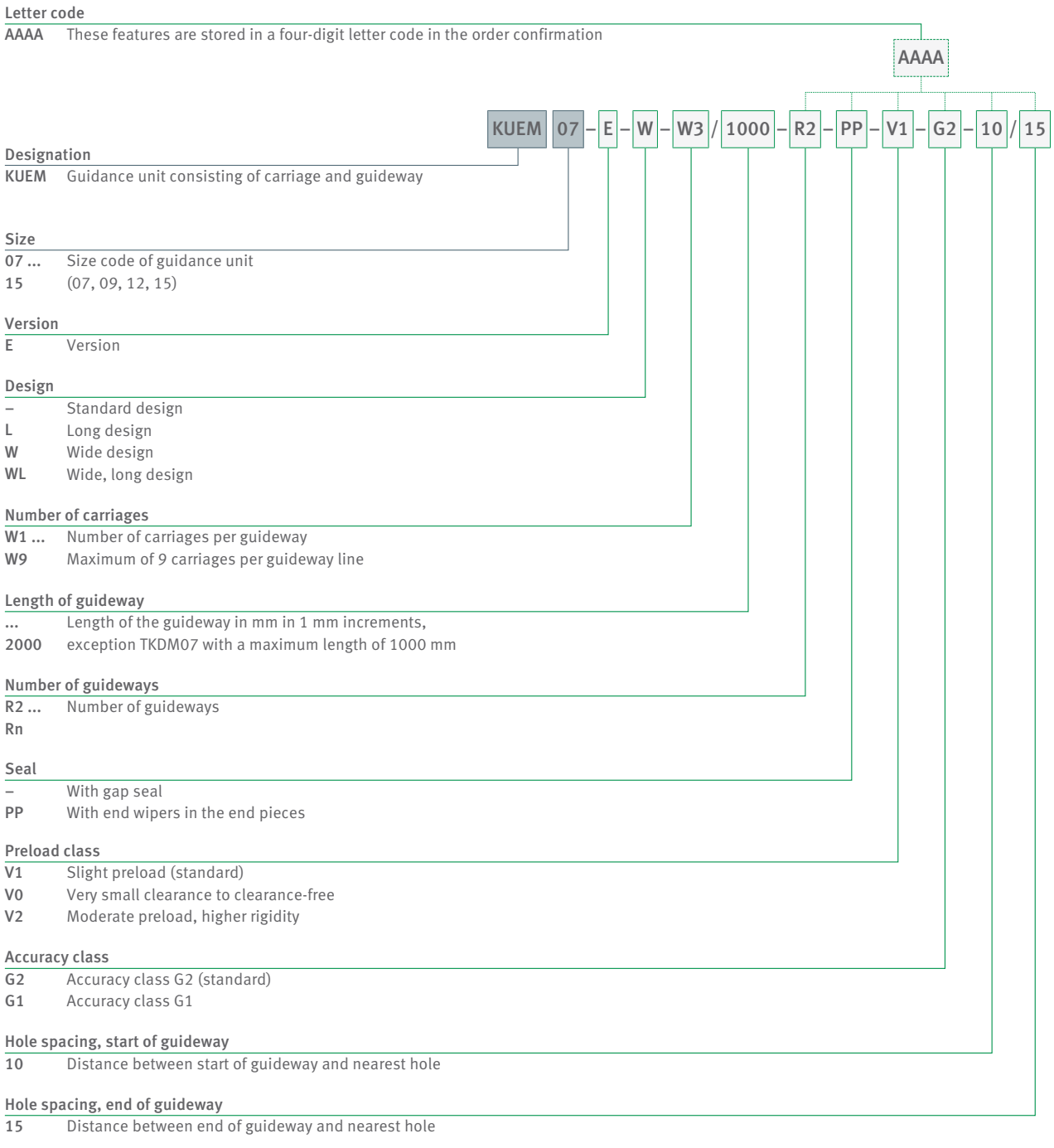

Letter code
AAAA These features are stored in a four-digit letter code in the order confirmation

Designation
KUEM Guidance unit consisting of carriage and guideway

Size
07 ... Size code of guidance unit
15 (07, 09, 12, 15)

Version
E Version

Design
– Standard design
L Long design
W Wide design
WL Wide, long design

Number of carriages
W1 ... Number of carriages per guideway
W9 Maximum of 9 carriages per guideway line

Length of guideway
... Length of the guideway in mm in 1 mm increments,
2000 exception TKDM07 with a maximum length of 1000 mm

Number of guideways
R2 ... Number of guideways
Rn

Seal
– With gap seal
PP With end wipers in the end pieces

Preload class
V1 Slight preload (standard)
V0 Very small clearance to clearance-free
V2 Moderate preload, higher rigidity

Accuracy class
G2 Accuracy class G2 (standard)
G1 Accuracy class G1

Hole spacing, start of guideway
10 Distance between start of guideway and nearest hole

Hole spacing, end of guideway
15 Distance between end of guideway and nearest hole

001B1BBD

ALMOTION B.V. Nijverheidsweg 14 | 6662 NG Elst (Gld) | The Netherlands t +31(0)85 0491 777 e info@almotion.nl
www.almotion.nl | www.lineairegeleiding.nl | www.lineairegeleidingshop.nl | www.linearmotion.nl

3

25 Ordering designation structure, carriage

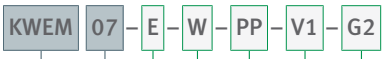

Designation
KWEM Two-row carriage

Size
07 ... Size code of carriage
15 (07, 09, 12, 15)

Version
E Version

Design
– Standard design
L Long design
W Wide design
WL Wide, long design

Seal
– With gap seal
PP With end wipers in the end pieces

Preload class
V1 Slight preload (standard)
V0 Very small clearance to clearance-free

Accuracy class
G2 Accuracy class G2 (standard)

001B1BCD

26 Ordering designation structure, guideway

Letter code
AAAA These features are stored in a four-digit letter code in the order confirmation

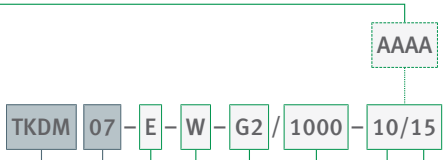

Designation
TKDM Guideway for carriage KWEM

Size
07 ... Size code of guideway
15 (07, 09, 12, 15)

Version
E Version

Design
– Standard design
W Wide design

Accuracy class
G2 Accuracy class G2 (standard)

Length of guideway
... Length of the guideway in mm in 1 mm increments,
2000 exception TKDM07 with a maximum length of 1000 mm

Hole spacing, start of guideway
10 Distance between start of guideway and nearest hole

Hole spacing, end of guideway
15 Distance between end of guideway and nearest hole

001B1BDD

ALMOTION B.V. Nijverheidsweg 14 | 6662 NG Elst (Gld) | The Netherlands t +31(0)85 0491 777 e info@almotion.nl
www.almotion.nl | www.lineairegeleiding.nl | www.lineairegeleidingshop.nl | www.linearmotion.nl

Linear recirculating ball bearing and guideway assemblies KUEM..-E with carriage and guideway in accuracy class G1 as complete unit

If carriage and guideway are to have accuracy class G1, a KUEM..-E system must be ordered. Carriage and guideway are then ordered under a joint order number.

An order is to be placed for one KWEM..-E carriage with accuracy class G1 and a matching guideway. As accuracy class G1 is required, carriage KWEM..-E and guideway TKDM..-E must be ordered together.

An order is placed for one linear recirculating ball bearing and guideway assembly KUEM..-E:

- 1 carriage: KWEM..-E
- size: 15
- preload: V1
- accuracy class: G1
- with end wipers
- with lubricant reservoir
- matching guideway: TKDM..-E
- size: 15
- accuracy class G1
- length: 1230 mm
- a_L: 15 mm
- a_R: 15 mm

Ordering designation provided by the customer and in the order confirmation (with sample letter code):

- 1×KUEM15-E-W1/1230-R1-PP-V1-G1-10/15

27 Ordering example, ordering designation

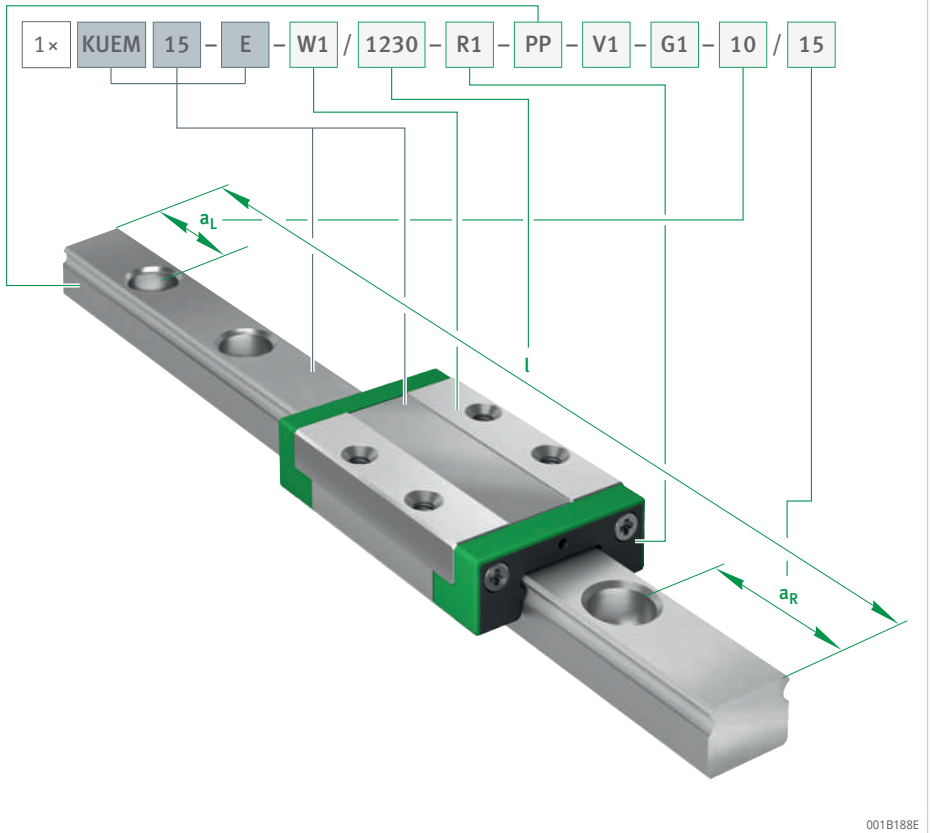

ALMOTION B.V. Nijverheidsweg 14 | 6662 NG Elst (Gld) | The Netherlands t +31(0)85 0491 777 e info@almotion.nl
www.almotion.nl | www.lineairegeleiding.nl | www.lineairegeleidingshop.nl | www.linearmotion.nl

3

Guideway with carriage ordered separately

An order is placed for a carriage and a matching guideway with a symmetrical hole pattern:

- carriage: KWEM..-E
- size: 09
- preload: V1
- accuracy class: G2
- with lubricant reservoir
- matching guideway: TKDM..-E
- size: 09
- accuracy class G2
- length: 420 mm

Ordering designation provided by the customer and in the order confirmation (with sample letter code):

- 1×KWEM09-E-V1-G2
- 1×TKDM09-E-G2/420

28 Ordering example, ordering designation

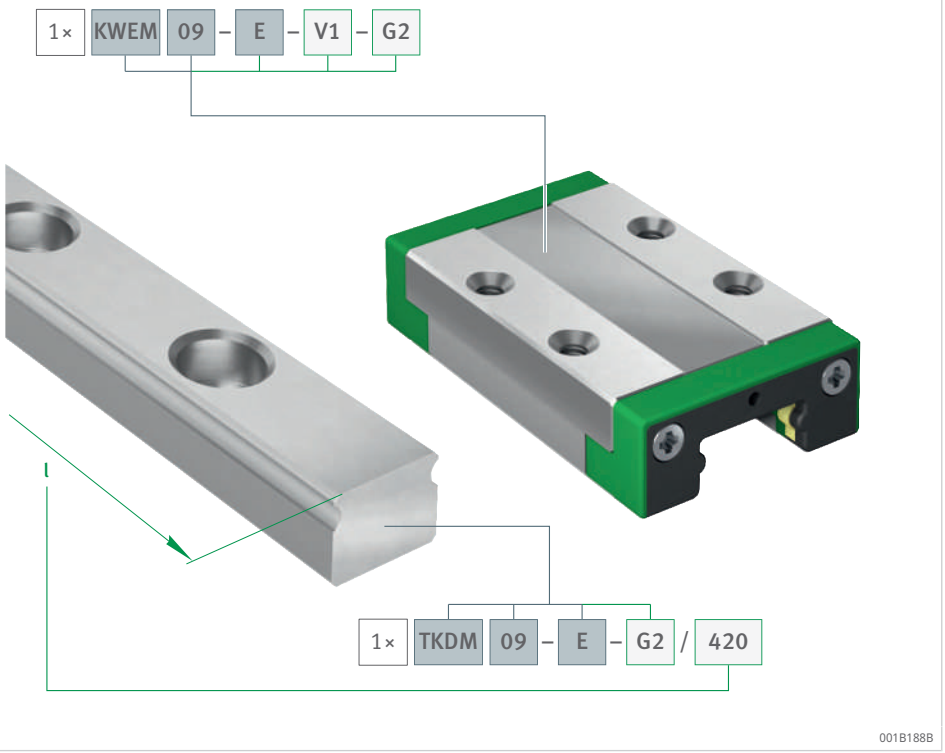

ALMOTION B.V. Nijverheidsweg 14 | 6662 NG Elst (Gld) | The Netherlands t +31(0)85 0491 777 e info@almotion.nl
www.almotion.nl | www.lineairegeleiding.nl | www.lineairegeleidingshop.nl | www.linearmotion.nl

Carriage

Single carriages can be ordered as follows:

- carriage: KWEM..-E
- size: 09
- with end wipers: PP
- preload: V1
- accuracy class: G2
- with lubricant reservoir

Ordering designation provided by the customer and in the order confirmation (with sample letter code):

- KWEM09-E-PP-V1-G2

29 Ordering example, ordering designation

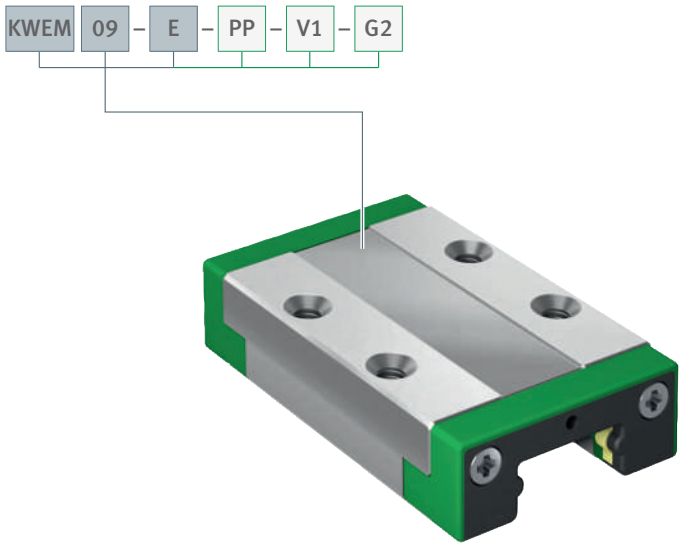

ALMOTION B.V. Nijverheidsweg 14 | 6662 NG Elst (Gld) | The Netherlands t +31(0)85 0491 777 e info@almotion.nl
www.almotion.nl | www.lineairegeleiding.nl | www.lineairegeleidingshop.nl | www.linearmotion.nl

Guideway

The displacement distance needs to be extended. As a result, a longer guideway is required.

The guideway can be ordered as follows:

- guideway that can be combined with the existing carriage of identical size and belonging to accuracy class G2: TKDM..-E
- size: 09
- accuracy class: G2
- length: 420 mm

Ordering designation provided by the customer and in the order confirmation (with sample letter code):

- TKDM09-E-G2/420

30 Ordering example, ordering designation

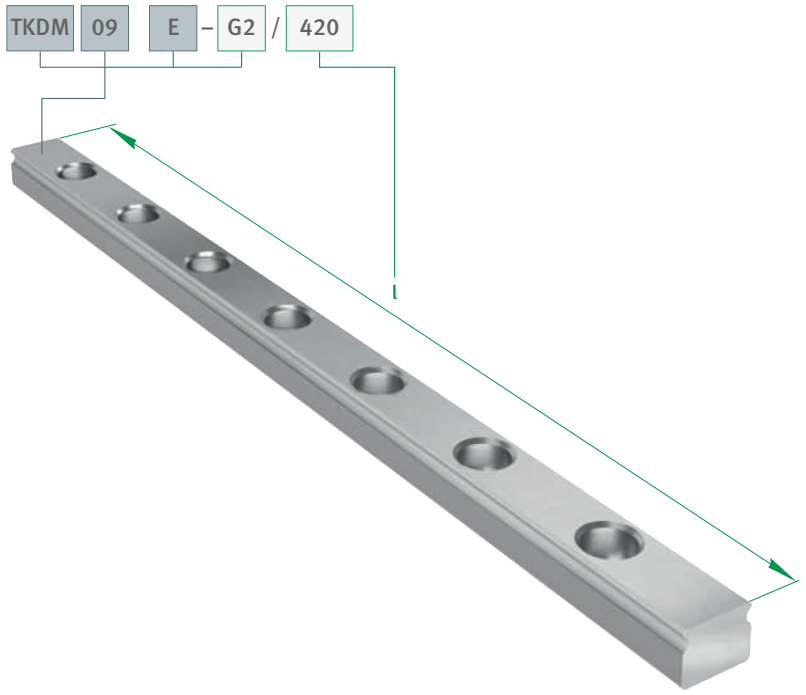

ALMOTION B.V. Nijverheidsweg 14 | 6662 NG Elst (Gld) | The Netherlands t +31(0)85 0491 777 e info@almotion.nl
www.almotion.nl | www.lineairegeleiding.nl | www.lineairegeleidingshop.nl | www.linearmotion.nl