Modular units B series

Complete assembled groups , 1/4" ÷ 1/2"

Complete assembled groups code key

Series	Size (1)	Connection (1)	Thread (1)	Modular units(1) + types(2)
B	**4**	**4**	**G**	**V02B01PL01**

Series	Size	Connection	Thread	Modular units
B	2	2 = 1/4"	G = Gas	F = Filter
	3	3 = 3/8"	N = NPT	M = Oil mist separator
	4	4 = 1/2"		C = Active carbon filter
				R = Regulator
				B = Filter-regulator
				L = Lubricator
				V = Shut-off valve
				A = Soft-start valve
				D = "T" porting block

See the tables below and in the following page

Filter, **F**

Suffix type	Description
01	Polycarbonate cup, manual drain, 5 µm
02	Polycarbonate cup, automatic drain, 5 µm
03	Metal cup, manual drain, 5 µm
04	Metal cup, automatic drain, 5 µm

Oil mist separator, **M**

Suffix type	Description
01	Polycarbonate cup, manual drain, 0,3 µm
02	Polycarbonate cup, automatic drain, 0,3 µm
03	Metal cup, manual drain, 0,3 µm
04	Metal cup, automatic drain, 0,3 µm
09	Polycarbonate cup, manual drain, 0,01 µm
10	Polycarbonate cup, automatic drain, 0,01 µm
11	Metal cup, manual drain, 0,01 µm
12	Metal cup, automatic drain, 0,01 µm

Active carbon filter, **C**

Suffix type	Description
01	Polycarbonate cup, manual drain, 0,003 µm
02	Polycarbonate cup, automatic drain, 0,003 µm
03	Metal cup, manual drain, 0,003 µm
04	Metal cup, automatic drain, 0,003 µm

Lubricator, **L**

Suffix type	Description
01	Polycarbonate cup
02	Metal cup

"T" porting block, **D**

Suffix type	Description
-	"T" porting block

Regulator, **R**

Suffix type	Description
01	With square built-in pressure gauge
01T	With female threaded adapter for round pressure-gauge*
01P	With PNP digital pressure switch
01N	With NPN digital pressure switch

Filter-regulator, **B**

Suffix type		Description
01	Presssure gauge and pressure switch options	Polycarbonate cup, manual drain, 5 µm
02		Polycarbonate cup, automatic drain, 5 µm
03		Metal cup, manual drain, 5 µm
04		Metal cup, automatic drain, 5 µm

-	With square built-in pressure gauge
T	With female threaded adapter for round pressure-gauge*
P	With PNP digital pressure switch
N	With NPN digital pressure switch

Soft-start valve, **A**

Suffix type	Description
01	With square built-in pressure gauge
01T	With female threaded adapter for round pressure-gauge*
01P	With PNP digital pressure switch
01N	With NPN digital pressure switch

Shut-off valve, **V**

Suffix type	Description
01	Manual actuation
02	Electrical actuation

*to be ordered separaterly, see from page 3.30.2

ALMOTION B.V. Nijverheidsweg 14 | 6662 NG Elst (Gld) | The Netherlands t +31(0)85 0491 777 e info@almotion.nl

www.almotion.nl | www.lineairegeleiding.nl | www.lineairegeleidingshop.nl | www.linearmotion.nl

Modular units B series

Complete assembled groups , 1/4" ÷ 1/2"

How to order

Series	Type	Connection	Thread	Modular units+types
B	4	4	G	V02B02PL01

Notes

Options in the same grid are alternative to each others.

(1) For combination between size, connection, thread and type, see single component data sheet pages.

(2) Is required to specify features of each modular unit, according to descriptions in the relevant tables.

For features, dimensions and standard materials, see the single component data sheet pages.

In the complete assembled group, the single modular units are connected each other between connessi "T" type brackets B..Z105, already supplied and mounted.

For other mounting accessories, to be ordered separately, see from page 3.4.300

For coils and connectors of electircal operated units, to be ordered separately, see from page 2.315.1

For spare parts, to be ordered separately, see from page 3.4.400; for gauges see from page 3.4.450

Components sequence example

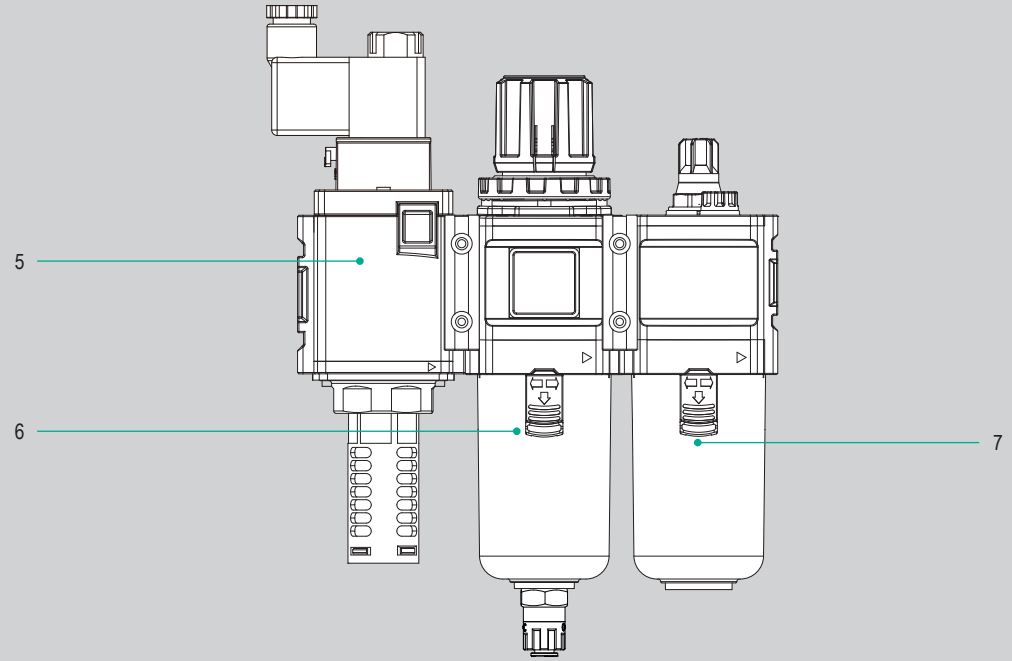

1	2	3	4	5	6	7
B	4	4	G	V 02	B 02P	L 01

Pos.	Sequence	Description	Type
1	B Group series	Series B	Group features Once selected, they are fixed for all the components.
2	4 Group size	Size 4	
3	4 Group connection	1/2" connection	
4	G Group thread	Gas thread	
5	Function V 02 Type	Shut-off valve (**V**) with electrical actuation (type **02**)	Modular unit sequence Is possible to include all needed modular units in the group, making sure to select the desired type for each one. Modular units are assembled each other with "T" type brackets. The component configuration sequence is in order from right to left.
6	Function B 02P Type	Filter-regulator (**B**) with polycarbonate cup, 5 µm filtering element, automatic condense drain and digital pressure switch (type **02P**)	
7	Function L 01 Type	Lubricator (**L**) with polycarbonate cup (type **01**)	

ALMOTION B.V. Nijverheidsweg 14 | 6662 NG Elst (Gld) | The Netherlands t +31(0)85 0491 777 e info@almotion.nl

www.almotion.nl | www.lineairegeleiding.nl | www.lineairegeleidingshop.nl | www.linearmotion.nl