Modular units B series

Pressure-gauges and pressure-switches, 1/4" ÷ 1/2"

Code key

Series	Component	Type
B	**Z3**	**03**
B	Z3 = pressure-gauges and pressure-switches	01 = Analog square pressure-gauge 02 = Female threaded adapter for round pressure-gauges* 03 = Digital PNP pressure switch 04 = Digital NPN pressure switch

How to order

Series	Component	Type
B	**Z3**	**03**

Note

Options in the same grid are alternative to each others.

For standard materials, see single component data sheet pages.

*Pressure gagues to be ordered separaterly, see from page 3.30.20

Component series BZ3 matching

Type			Size			Data sheet page
			2	3	4	
01	Analog square pressure-gauge		•	•	•	3.4.451
02	Female threaded adapter for round pressure-gauges*		•	•	•	3.4.451
03	Digital PNP pressure switch		•	•	•	3.4.452
04	Digital NPN pressure switch		•	•	•	3.4.452

*Round pressure gagues to be ordered separaterly, see from page 3.30.1

ALMOTION B.V. Nijverheidsweg 14 | 6662 NG Elst (Gld) | The Netherlands t +31(0)85 0491 777 e info@almotion.nl

www.almotion.nl | www.lineairegeleiding.nl | www.lineairegeleidingshop.nl | www.linearmotion.nl

Modular units B series

Pressure-gauges and pressure-switches, 1/4" ÷ 1/2"

Square analog pressure-gauge, series BZ301

	Size	Code	Item	Matching
	1/4"	091061	BZ301	B..R.. B..B.. B..A..
	3/8"			
	1/2"			

Female threaded adapter for round pressure-gagues*, series BZ302

	Size	Code	Item	Matching
	1/4"	091060	BZ302	B..R.. B..B.. B..A..
	3/8"			
	1/2"			

*Round pressure gagues to be ordered separaterly, see from page 3.30.1

ALMOTION B.V. Nijverheidsweg 14 | 6662 NG Elst (Gld) | The Netherlands t +31(0)85 0491 777 e info@almotion.nl

www.almotion.nl | www.lineairegeleiding.nl | www.lineairegeleidingshop.nl | www.linearmotion.nl

Modular units B series

Pressure-gauges and pressure-switches, 1/4" ÷ 1/2"

Main features

Code	Item	Description	Symbol
091096	BZ303	PNP digital pressure-switch	
091097	BZ304	NPN digital pressure-switch	



Technical data

Articolo		BZ303	BZ304
Code		091096	091097
Size matching		1/4" - 3/8" - 1/2"	
Function		Digital pressure switch	
Circuit		PNP	NPN
Fluid		Compressed filtered air, incombustible and non-corrosive gases	
Rated pressure range(1)		0 ÷ 10 bar	
Display pressure range(2)		0,1 ÷ 10 bar	
Maximum pressure		15 bar	
Pressure units		MPa, kgf/cm^2, bar, psi	
Pressure resolution		- 0.001 MPa 0.01 kgf/cm2 0.01 bar 0.1 psi - -	
Repeatibility		≤ ±0.2% F.S. ±1 digit	
LCD display		3$^{1/2}$ Red / Green	
Protection class		IP40	
Temperature range		0 ÷ +50°C	
Ambient humidity range		35 ÷ 85% RH (without condense)	
Voltage		12 ÷ 24 V DC (±10%)	
Current consumption		≤ 40 mA (without load)	
Switch output (protected from over-run)	open collector output	PNP	NPN
	max. load current	125 mA	
	max. supply voltage	30V DC	
	Residual voltage	≤ 1.5V	
	Response time	≤ 2,5 ms (chattering-proof function 25, 100, 250, 500, 1000, 1500 ms)	
Hysteresis(3)		Adjustable	
Whitstand voltage		1000 V AC	
Insulation		≥ 50 MΩ (at 500 VDC)	
Vibration		Total amplitude 1,5 mm or 10G, 10 Hz - 55 Hz - 10 Hz scan for 1 minute, 2 hours each direction of X, Y and Z	
Impact		100 m/s² (10 G), 3 times each in direction of X, Y and Z	
Main cable (included)		Oil resistant cable (Ø 4 mm) - 150 mm lenght - M8 connector	

Notes

(1) Pressure range within technical features of components are granted.

(2) Pressure range possible to display on component. Pressure values displayed can also be off the nominal pressure range and in this case technical features are not granted.

(3) Hysteresis value adjustable from 1 to 8 digits.

ALMOTION B.V. Nijverheidsweg 14 | 6662 NG Elst (Gld) | The Netherlands t +31(0)85 0491 777 e info@almotion.nl

www.almotion.nl | www.lineairegeleiding.nl | www.lineairegeleidingshop.nl | www.linearmotion.nl

Modular units B series

Pressure gauges and pressure switches, 1/4" ÷ 1/2"

Standard dimensions

Typo: **BZ303 - BZ304**

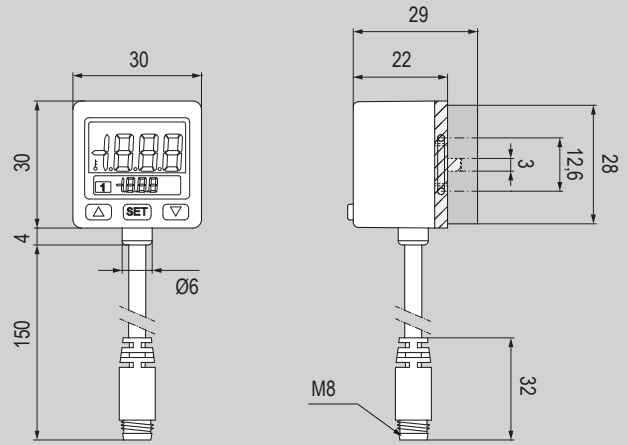

M8 connector pinout

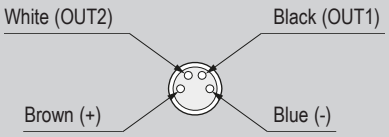

Circuit schemes

Type: **BZ303**

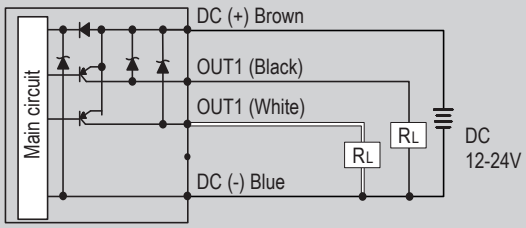

Circuit PNP

Type: **BZ304**

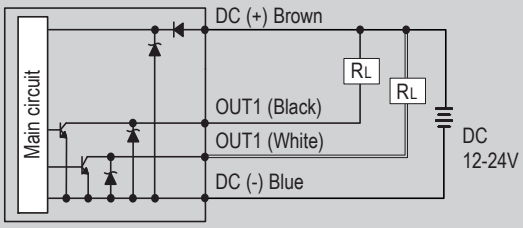

Circuit NPN

Function



Mounting

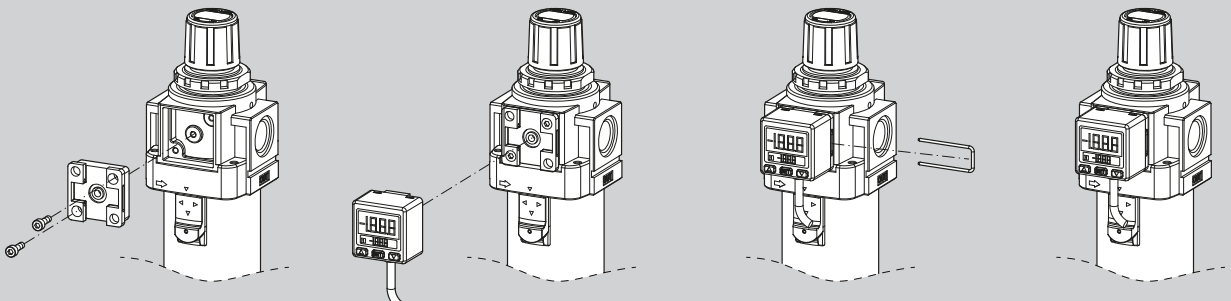

fig.1 fig.2 fig.3 fig.4

To mount BZ303 or BZ304 digital pressure switch, place the pressure switch base on the modular unit body and secure it with the supplied screws (fig.1).
Place the digital pressure switch body on the adapter (fig.2) and secure it with the supplied clip, inserting it into the appropriate holes on the left side of the base (fig.3).
Arrange the cable as needed (fig.4) and connect it to the power supply (M8 connector).

ALMOTION B.V. Nijverheidsweg 14 | 6662 NG Elst (Gld) | The Netherlands t +31(0)85 0491 777 e info@almotion.nl
www.almotion.nl | www.lineairegeleiding.nl | www.lineairegeleidingshop.nl | www.linearmotion.nl