Modular units B series

Shut-off valves, 1/4" ÷ 1/2"

Main features

Code	Item	Size	Connection	Actuation	Function	Symbol
091011	B22GV01	2	1/4"	Manual	Shut-off valve	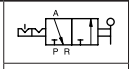
091009	B22GV02			Electrical		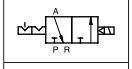
091028	B33GV01	3	3/8"	Manual		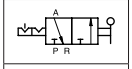
091026	B33GV02			Electrical		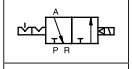
091045	B44GV01	4	1/2"	Manual		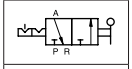
091043	B44GV02			Electrical		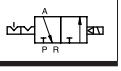





Technical data

Item	B22..V01	B22..V02	B33..V01	B33..V02	B44..V01	B44..V02
Size	2		3		4	
Connection	1/4"		3/8"		1/2"	
Actuation	Manual	Electrical	Manual	Electrical	Manual	Electrical
Fluid	Compressed air					
Maximum inlet pressure	10 bar					
Temperature range	+5°C ÷ +60°C					
Connections number	3					
Positions number	2					
Knob rotation	0° ÷ 90°	-	0° ÷ 90°	-	0° ÷ 90°	-
Coil (to be ordered separately)	-	ASA12 (see page 2.315.10)	-	ASA12 (see page 2.315.10)	-	ASA12 (see page 2.315.10)
Connector (to be ordered separately)	-	A122 (see page 2.318.12)	-	A122 (see page 2.318.12)	-	A122 (see page 2.318.12)
Weight	110 g	240 g	150 g	290 g	320 g	480 g

Notes

Assembling modular components require "T" type bracket type B..Z105, to be ordered separately, see page 3.4.303
For mounting accessories, to be ordered separately, see from page 3.4.300
Units are supplied complete with exhaust silencer. Coils and connectors for electircal operated versions are to be ordered separately, see from page 2.315.1
For spare parts see from page 3.4.400
For assembled groups see from page 3.4.500

ALMOTION B.V. Nijverheidsweg 14 | 6662 NG Elst (Gld) | The Netherlands t +31(0)85 0491 777 e info@almotion.nl
www.almotion.nl | www.lineairegeleiding.nl | www.lineairegeleidingshop.nl | www.linearmotion.nl

Modular units B series

Shut-off valves, 1/4" ÷ 1/2"

Code key

Series	Size (1)	Connection (1)	Thread	Modular unit	Type
B	**3**	**3**	**G**	**V**	**01**
B	2	2 = 1/4"	G = Gas	V = Shut-off valve	01 = Manual actuation
	3	3 = 3/8"	N = NPT		02 = Electrical actuation
	4	4 = 1/2"			

How to order

Series	Size	Connection	Thread	Modular unit	Type
B	**3**	**3**	**G**	**V**	**01**

Notes

Options in the same grid are alternative to each others.
(1) Standard combination between size and connection are highlighted by the green in the code key table above. For further non-standard combinations, please contact the sales department.
For standard materials, see the table below.
Assembling modular components require "T" type bracket B..Z105, to be ordered separately, see from page 3.4.300
For other mounting accessories, see from page 3.4.300.
For spare parts, see from page 3.4.400.
For assembled groups code key, see from page 3.4.500

Standard materials

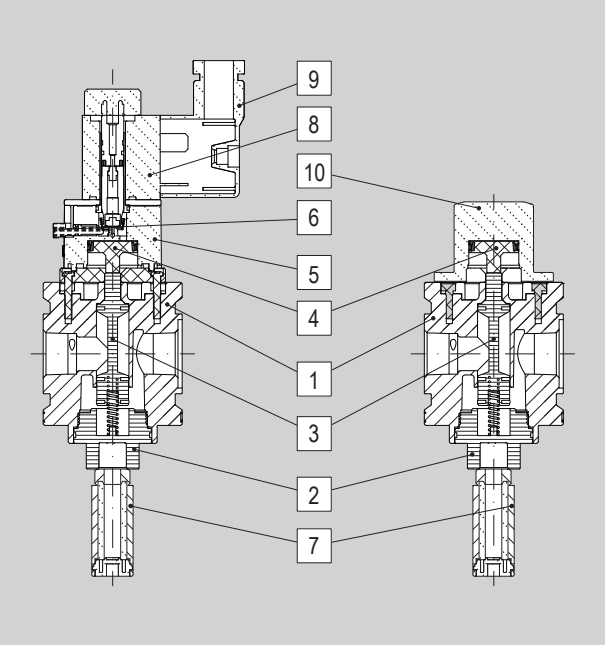

Position	Description	Material	
		Type V01	Type V02
1	Body	Die-cast aluminium	
2	Cover	Aluminium	
3	Spool	Aluminium	
4	Piston	Copper	
5	Solenoid valve seat	-	Saturated polyester
6	Manual override	-	Steel
7	Silencer	Polyethylene	
8	Coil*	-	Acetalic resin
9	Connector*	-	Acetalic resin
10	Knob	Acetalic resin	-

*To be ordered separately, see from page 2.315.1

ALMOTION B.V. Nijverheidsweg 14 | 6662 NG Elst (Gld) | The Netherlands t +31(0)85 0491 777 e info@almotion.nl
www.almotion.nl | www.lineairegeleiding.nl | www.lineairegeleidingshop.nl | www.linearmotion.nl

Modular units B series

Shut-off valves, 1/4" ÷ 1/2", manual actuation

Standard dimensions

Series: **B22..V01 - B33..V01 - B44..V01**

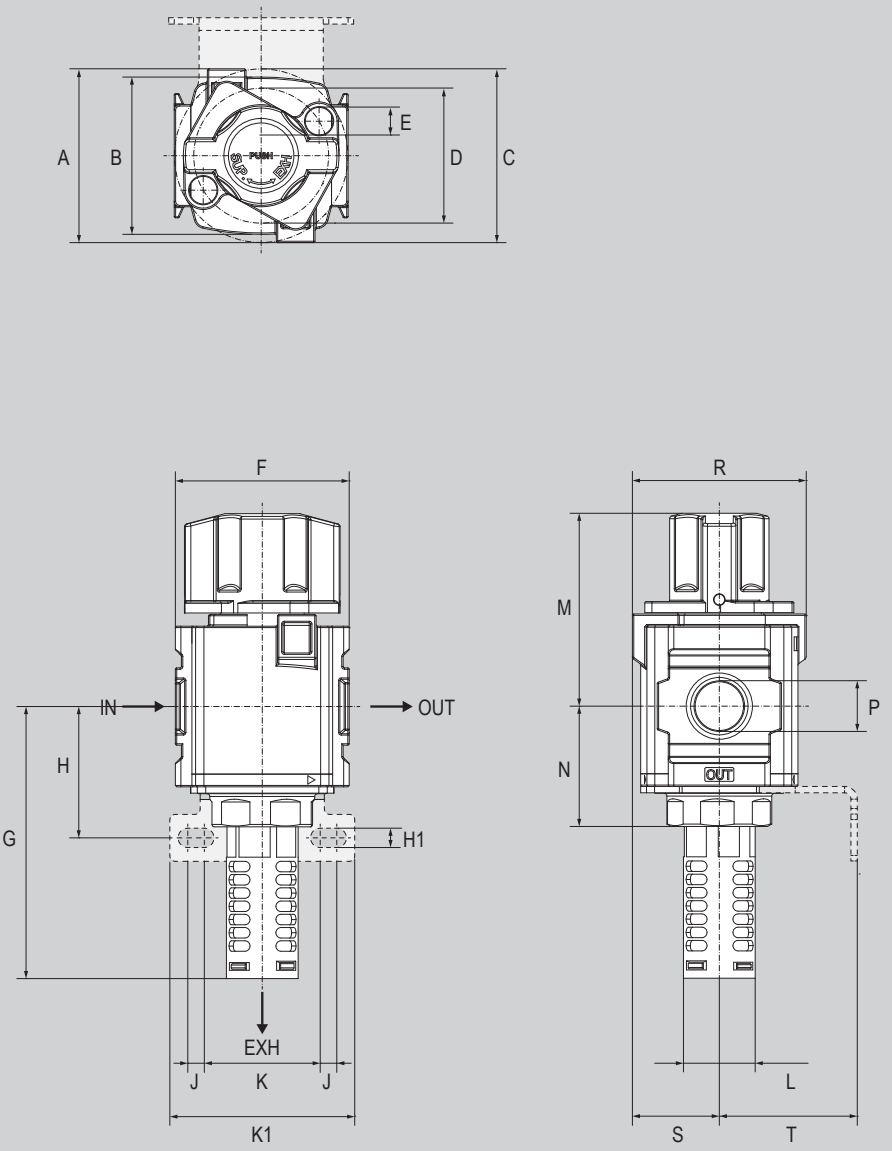

Size	Connection (P)	A	B	C	D	E	F	G	H	H1	J	K	K1	L	M	N	R	S	T
2	1/4"	42,9	40	45	35	6	45	39	34	5,4	2,4	35,2	50	20	53	35	42,9	21,5	30
3	3/8"	-	46	45	35	6	50	44,1	38,1	6,5	6,5	29	54	20	53,7	40,4	46	23	41
4	1/2"	63	57	62,9	48,9	10	63	56,1	47,6	7	6	42	67	26	69,9	43,6	63	31,5	50

ALMOTION B.V. Nijverheidsweg 14 | 6662 NG Elst (Gld) | The Netherlands t +31(0)85 0491 777 e info@almotion.nl

www.almotion.nl | www.lineairegeleiding.nl | www.lineairegeleidingshop.nl | www.linearmotion.nl

Modular units B series

Shut-off valves, 1/4" ÷ 1/2", electrical actuation

Standard dimensions

Series: **B22..V02 - B33..V02 - B44..V02**

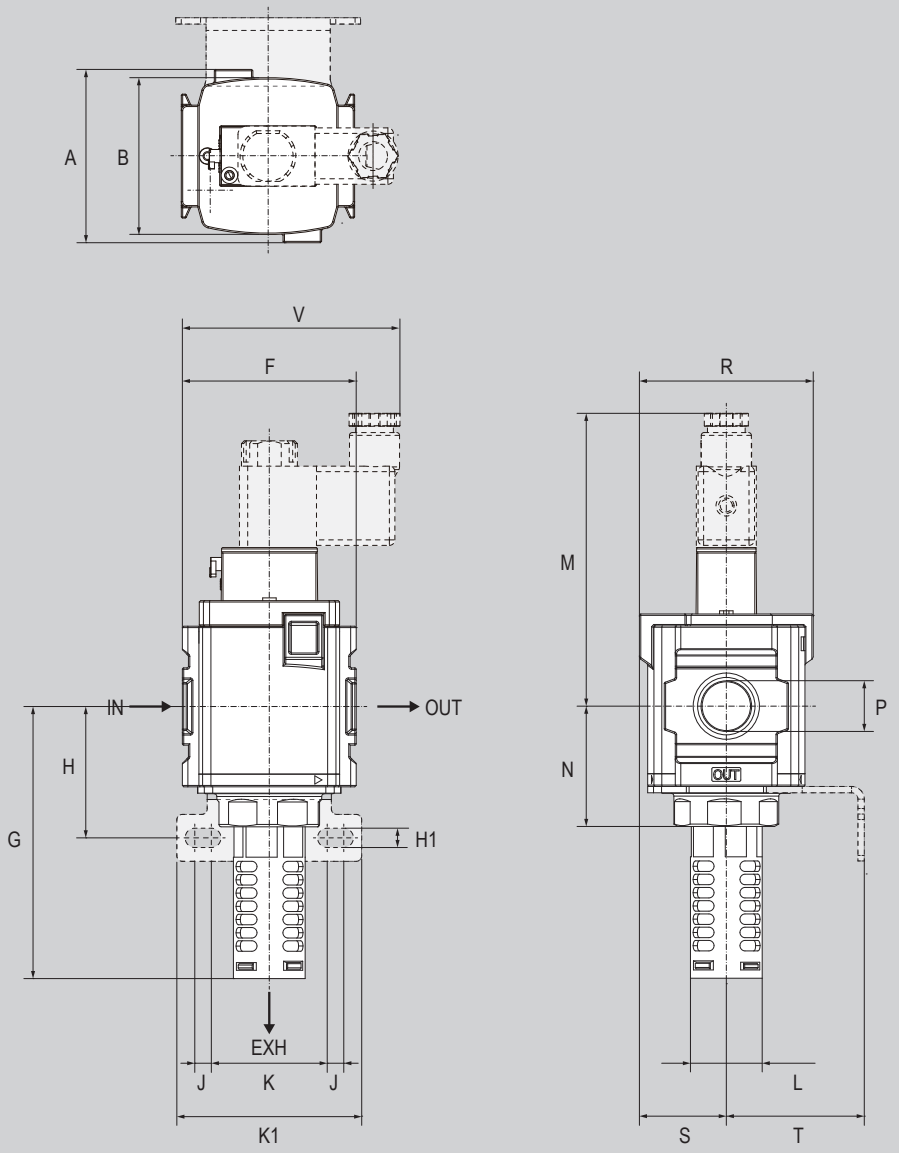

Size	Connection (P)	A	B	F	G	H	H1	J	K	K1	L	M	N	R	S	T	V
2	1/4"	-	40	45	39	34	5,4	2,4	35,2	50	20	102,3	35	42,9	21,5	30	69,9
3	3/8"	-	46	50	44,1	38,1	6,5	6,5	29	54	20	102,9	40,4	46	23	41	72,4
4	1/2"	63	57	63	56,1	47,6	7	6	42	67	26	111,2	43,6	63	31,5	50	78,9

ALMOTION B.V. Nijverheidsweg 14 | 6662 NG Elst (Gld) | The Netherlands t +31(0)85 0491 777 e info@almotion.nl

www.almotion.nl | www.lineairegeleiding.nl | www.lineairegeleidingshop.nl | www.linearmotion.nl