Modular units B series
"T" porting block, 1/4" ÷ 1/2"

Main features

Code	Item	Size	Connection	Function	Symbol
091098	B22GD	2	1/4"	"T" porting block	
091099	B44GD	3 - 4	1/2"		



Technical data

Item	B22..D..	B44..D..
Size	2	3 - 4
Connection	1/4"	1/2"
Fluid	Compressed air	
Pressure range	0 ÷ 10 bar	
Temperature range	0°C ÷ +50°C	
Weight	107 g	196 g

Notes

Assembling modular components require "T" type bracket type B..Z105, to be ordered separately, see page 3.4.303
For mounting accessories, to be ordered separately, see from page 3.4.300
For assembled groups see from page 3.4.500

ALMOTION B.V. Nijverheidsweg 14 | 6662 NG Elst (Gld) | The Netherlands t +31(0)85 0491 777 e info@almotion.nl
www.almotion.nl | www.lineairegeleiding.nl | www.lineairegeleidingshop.nl | www.linearmotion.nl

Modular units B series

"T" porting block, 1/4" ÷ 1/2"

Code key

Series	Size (1)	Connection (1)	Thread	Modular unit
B	**4**	**4**	**G**	**D**
B	2	2 = 1/4"	G = Gas	D = "T" porting block
	3 - 4	4 = 1/2"	N = NPT	

How to order

Series	Size	Connection	Thread	Modular unit
B	**3 - 4**	**4**	**G**	**D**

Notes

Options in the same grid are alternative to each others.
(1) Standard combination between size and connection are highlighted by the links in the code key table above. For further non-standard combinations, please contact the sales department.
For standard materials, see the table below.
For other mounting accessories, see from page 3.4.300.
For spare parts, see from page 3.4.400.
For assembled groups code key, see from page 3.4.500

Standard materials

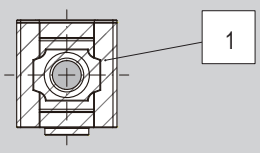

Position	Description	Material
1	Body	Die-cast aluminium

ALMOTION B.V. Nijverheidsweg 14 | 6662 NG Elst (Gld) | The Netherlands t +31(0)85 0491 777 e info@almotion.nl
www.almotion.nl | www.lineairegeleiding.nl | www.lineairegeleidingshop.nl | www.linearmotion.nl

Modular units B series
"T" porting block, 1/4" ÷ 1/2"

Standard dimensions

Series: **B22..D - B44..D**

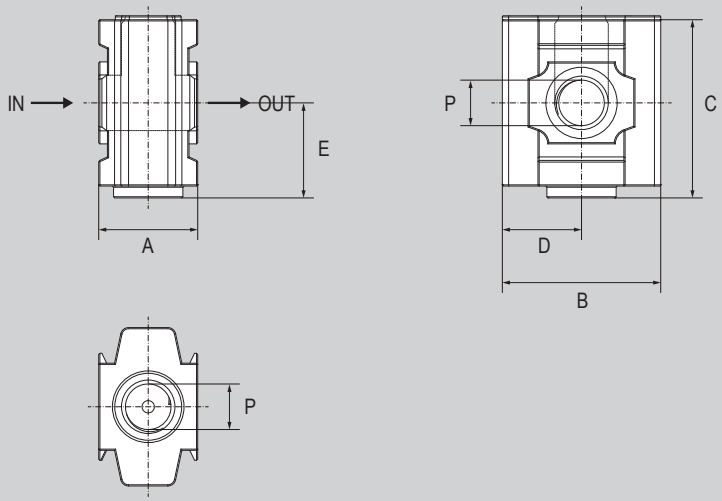

Size	Connection (P)	A	B	C	D	E
2	1/4"	25	40	45	24	29,1
4	1/2"	34	50	54,2	25,1	29,1

ALMOTION B.V. Nijverheidsweg 14 | 6662 NG Elst (Gld) | The Netherlands t +31(0)85 0491 777 e info@almotion.nl
www.almotion.nl | www.lineairegeleiding.nl | www.lineairegeleidingshop.nl | www.linearmotion.nl